1. ALL RESISTANCE VALUES ARE IN OHMS, 0.1 WATT +/- 5%.
2. ALL CAPACITANCE VALUES ARE IN MICROFARADS.
3. ALL CRYSTALS & OSCILLATOR VALUES ARE IN HERTZ.

X941 MLB SCHEMATIC

LAST_MODIFICATION=Wed Jan 10 14:52:52 2018

REV	ECN	DESCRIPTION OF REVISION	CK APPD / DATE
4	0010936498	ENGINEERING RELEASED	2018-01-10

PAGE	CSA	CONTENTS	SYNC	DATE
1	1	Table of Contents		
2	2	BOM Configuration	SHART_J44	11/27/2012
3	3	BOM Configuration	J79_JACK	04/07/2016
4	4	PD Parts	J79A_MLB	01/31/2017
5	5	CPU GFX	J132_JIN	05/09/2017
6	6	CPU MISC/JTAG/CFG/RSVD	J132_JIN	05/09/2017
7	7	CPU LPDDR3 Interface	J132_GAREN	02/03/2017
8	8	CPU & PCH Power	J132_JIN	06/06/2017
9	9	CPU & PCH Grounds	J132_GAREN	02/03/2017
10	10	CPU Core Decoupling	T290_CARD_CFL_U	03/15/2017
11	11	CPU GT Decoupling	T290_CPU	07/19/2016
12	12	PCH Decoupling	J132_JIN	04/28/2017
13	13	PCH Audio/LPC/SPI/SMBus	J132_JIN	05/09/2017
14	14	PCH Power Management	T290_CARD_CFL_U	03/09/2017
15	15	PCH PCIE/USB/CLKS	J132_JIN	06/12/2017
16	16	PCH SPI/UART/GPIO	J132_JIN	04/28/2017
17	18	CPU/PCH Merged XDP	J132_JIN	05/09/2017
18	19	Chipset Support 1	J132_JIN	06/05/2017
19	20	Chipset Support 2	J132_JIN	09/05/2017
20	22	LPDDR3 VREF Margining	J79A_MLB	01/31/2017
21	23	LPDDR3 DRAM Channel A (00-31)	J79A_MLB	01/31/2017
22	24	LPDDR3 DRAM Channel A (32-63)	J79A_MLB	01/31/2017
23	25	LPDDR3 DRAM Channel B (00-31)	J79A_MLB	01/31/2017
24	26	LPDDR3 DRAM Channel B (32-63)	J79A_MLB	01/31/2017
25	27	LPDDR3 DRAM Termination	J79A_MLB	01/31/2017
26	28	USB-C HIGH SPEED 1	T290_CARD-CPU-CNL95	05/09/2017
27	29	USB-C HIGH SPEED 2	J680_MLB	03/30/2017
28	30	USB-C Support	J132_RUENJOU	04/24/2017
29	31	USB-C PORT CONTROLLER A	J680_MLB	03/30/2017
30	32	USB-C PORT CONTROLLER B	J680_MLB	03/30/2017
31	33	USB-C CONNECTOR A	J132_RUENJOU	03/22/2017
32	34	USBC X Connector Support	J140_MLB	04/03/2017
33	35	TBT 5V REGULATOR	J132_JIN	08/24/2017
34	36	WIFI/BT: Support	J132_JACK	05/30/2017
35	37	WIFI/BT: MODULE 1	J132_METE	09/22/2017
36	38	WIFI/BT: MODULE 2	J132_METE	08/23/2017
37	39	SoC GPIO/SEP/USB/DDR/Test	T290_BIGSUR	06/14/2017
38	40	SoC AOP/AON/SMC	T290_BIGSUR	06/14/2017
39	41	SoC ISP/I2C/UART/SPI/I2S	T290_BIGSUR	05/26/2017
40	42	SoC PCIe	T290_BIGSUR	03/15/2017
41	43	SoC Power 1	T290_BIGSUR	03/29/2017
42	44	SoC Power 2	T290_BIGSUR	01/31/2017
43	45	SoC Power 3	T290_BIGSUR	08/15/2017
44	46	SoC Ground	T290_BIGSUR	01/31/2017
45	47	SoC Shared Support	J132_JIN	09/05/2017
46	48	SoC Project Support	J132_JACK	11/03/2017
47	49	T151	J132_GREG	08/21/2017
48	50	Secure Element	J132_GREG	05/16/2017
49	51	T139 Support	J132_GREG	08/21/2017
50	52	I2C Connections 1	J132_JACK	05/30/2017
51	53	I2C Connections 2	J132_JACK	09/07/2017
52	54	Power Sensors: High Side	J132_JACK	11/03/2017
53	55	Power Sensors: Load Side	J132_JACK	11/03/2017
54	56	Power Sensors: Extended	J132_JACK	06/22/2017
55	57	Power Sensors: Extended 2	J132_JACK	11/09/2017
56	58	Thermal Sensors	J132_JACK	06/01/2017
57	59	Power Sensors:Extended 3	J132_JACK	05/26/2017
58	60	Fans/SMC/AMUX Support	J132_JACK	06/22/2017
59	62	Audio Placeholder	J132_ADRIEN	03/13/2017
60	63	Audio Jack Codec	J132_ADRIEN	06/02/2017
61	64	Audio Left Amplifiers	J132_TROY	12/13/2017
62	65	Audio Right Amplifiers	J132_TROY	12/13/2017
63	66	Audio Flex Connectors	J132_PRADEEP	06/05/2017
64	67	Keyboard & Trackpad 1	J132_GAREN	04/12/2017
65	68	Keyboard & Trackpad 2	J132_JIN	09/05/2017
66	69	DC-In & Battery Connectors	J132_JIN	05/12/2017
67	70	PBUS Supply & Battery Charger	MAO_J132	02/21/2017
68	71	CORE & SA IMVP IC	J132_JIN	08/15/2017
69	72	CORE & SA IMVP POWER BLOCK	J132_JIN	05/09/2017
70	74	GT & GTX IMVP POWER BLOCK	J132_MAO	04/11/2017
71	75	Empty	J132_MAO	02/09/2017
72	76	Power - 5V 3.3V Supply	J132_GAREN	09/01/2017
73	77	Power - EOPIO EDRAM Supply	J132_JIN	08/15/2017
74	78	PMIC BUCKS AND SWs	J132_JIN	05/09/2017
75	79	PMIC LDOs	J132_ANDREW	06/21/2017
76	80	PMIC GPIOs & Control	J132_JIN	09/05/2017
77	81	Power - VDDQ VCCIO Supply	J132_JIN	09/05/2017
78	82	Power FETs	J132_JIN	09/05/2017
79	84	LCD Backlight Driver	J132_GAREN	04/12/2017
80	85	eDP Display Connector	J132_ANDREW	06/21/2017
81	86	S4E<0>	J137_GS5_REDHEAD	02/17/2017
82	87	S4E<1>	J137_GS5_REDHEAD	02/17/2017
83	88	S4E<2>	J137_GS5_REDHEAD	02/17/2017
84	89	S4E<3>	J137_GS5_REDHEAD	02/17/2017
85	90	OCARINA PMIC & NAND VCC VR	J137_GS5_REDHEAD	02/17/2017
86	96	SSD Support	J680_MLB	03/20/2017
87	98	Display Mux	J132_GAREN	04/12/2017
88	110	USB-C HIGH SPEED 1	J132_RUENJOU	04/18/2017
89	111	USB-C HIGH SPEED 2	J680_MLB	03/30/2017
90	112	USB-C Support	J132_RUENJOU	05/24/2017
91	113	USB-C PORT CONTROLLER A	J132_RUENJOU	03/22/2017
92	114	USB-C PORT CONTROLLER B	J132_RUENJOU	03/22/2017
93	115	USB-C CONNECTOR A	J132_RUENJOU	03/22/2017
94	116	USBC T Connector Support	J140_MLB	04/03/2017
95	117	TBT 5V REGULATOR	J132_JIN	08/24/2017
96	120	Power Aliases - 1	J132_JIN	06/05/2017
97	121	Power Aliases - 2	J140_MLB	04/05/2017
98	122	Signal Aliases	J132_GAREN	04/12/2017
99	123	LPDDR3 Bit & Byte Swizzle	AHARTMAN_J52	10/29/2013
100	124	ICT FCT 1	J132_CARLOS	06/15/2017
101	125	ICT FCT 2	J132_CARLOS	06/22/2017
102	127	Desense Capacitors 1	YHARTANTO_J44	01/09/2013
103	140	Dev Support 1	J132_PRADEEP	06/05/2017
104	141	Dev Support 2	J79_RIO	06/13/2015
105	142	BOM Variants 1	J132_BOMS	12/13/2017
106	143	BOM Variants 2	J132_BOMS	12/13/2017
107	145	Alternates BOM Table	J80_MLB	12/12/2015
108	150	References	J79_RUENJCU_CONSTRAINTS	06/11/2015

Schematic / PCB #'s

PART NUMBER	QTY	DESCRIPTION	REFERENCE DES	CRITICAL	BOM OPTION
051-02166	1	SCHEM,MLB,X941	SCH	CRITICAL	SCH
820-00853	1	PCBF,MLB,X941	PCB	CRITICAL	PCB

?

DRAWING TITLE: SCHEM,MLB,X941

Apple Inc.

DRAWING NUMBER: 051-02166 SIZE: D

REVISION: 4.0.0

BRANCH: evt-mars-0

PAGE: 1 OF 150

SHEET: 1 OF 108

NOTICE OF PROPRIETARY PROPERTY:
THE INFORMATION CONTAINED HEREIN IS THE PROPRIETARY PROPERTY OF APPLE INC.
THE POSSESSOR AGREES TO THE FOLLOWING:
I TO MAINTAIN THIS DOCUMENT IN CONFIDENCE
II NOT TO REPRODUCE OR COPY IT
III NOT TO REVEAL OR PUBLISH IT IN WHOLE OR PART
IV ALL RIGHTS RESERVED

Module Parts

CPU

PART NUMBER	QTY	DESCRIPTION	REFERENCE DES	CRITICAL	BOM OPTION
337S00456	1	CPU,CFL2,QTF5,E5,D0,2.3,28W,1.95,BGA1528	U0500	CRITICAL	CPU:2.3G
337S00456	1	CPU,CFL2,QTF4,E5,D0,2.3,28W,1.95,BGA1528	U0500	CRITICAL	CPU:2.5G
337S00456	1	CPU,CFL2,QTF3,E5,D0,2.3,28W,1.95,BGA1528	U0500	CRITICAL	CPU:2.6G
998-10522	1	SOCKET,CPU,CFL-U	U0500	CRITICAL	CPU:SOCKET

SOC

PART NUMBER	QTY	DESCRIPTION	REFERENCE DES	CRITICAL	BOM OPTION
339S00370	1	POP,SOC,GTBRAL7A8+1GB 20NM,M,B0,CSP1406	U3900	CRITICAL	SOC:B0_1G
339S00372	1	POP,SOC,GTBRAL7A8+2GB 20NM,M,B0,CSP1406	U3900	CRITICAL	SOC:B0_2G

SOC Alternate Parts

PART NUMBER	ALTERNATE FOR PART NUMBER	BOM OPTION	REF DES	COMMENTS:
339S00371	339S00370	SOC:B0_1G	ALL	Hynix 1GB SCK
339S00375	339S00370	SOC:B0_1G	ALL	Micron 1GB ATK
339S00376	339S00370	SOC:B0_1G	ALL	Hynix 1GB ATK
339S00373	339S00372	SOC:B0_2G	ALL	Hynix 2GB SCK
339S00377	339S00372	SOC:B0_2G	ALL	Micron 2GB ATK
339S00378	339S00372	SOC:B0_2G	ALL	Hynix 2GB ATK

BUILD	SOC	SE
P0	100% A06/B06	100% DEV
P1	100% A06/B06	100% DEV
EVT	100% A09/B09	10% DEV 90% PROD
DVT	95% A09/B09 5% A12/B12	5% DEV (W/ A09/B09 SOC) 95% PROD
PVT	100% A12/B12	100% PROD

SE

PART NUMBER	QTY	DESCRIPTION	REFERENCE DES	CRITICAL	BOM OPTION
998-11132	1	IC,RTM4,S52.1,PN80V,DEV,UFLGA64	U5000	CRITICAL	SE:DEV_2017
338S00253	1	IC,RTM4,S52.1,PN80V,PRD,UFLGA64	U5000	CRITICAL	SE:PROD_2017

TBT

PART NUMBER	QTY	DESCRIPTION	REFERENCE DES	CRITICAL	BOM OPTION
338S00356	2	IC,TBT,TITAN RIDGE DP,QTS2,ES2,B0 CSP337	U2800,UB000	CRITICAL	TBT_TR:B0
338S00399	2	IC,TBT,TITAN RIDGE DP,QTE2,ES2,C0 CSP337	U2800,UB000	CRITICAL	TBT_TR:C0
338S00408	2	IC,TBT,TITAN RIDGE DP,QUN2,QS,C1,CSP337	U2800,UB000	CRITICAL	TBT_TR:C1

ACE

PART NUMBER	QTY	DESCRIPTION	REFERENCE DES	CRITICAL	BOM OPTION
353S00961	4	IC,CD3215,ACE,C00,USB PWR SW,BLANK,BGA96	U3300,U3200,U3300,U3400	CRITICAL	ACE:C0_BGA
353S01442	4	IC,CD3215,ACE,C00,USB PWRSW,BLANK,BFBGA96	U3300,U3200,U3300,U3400	CRITICAL	ACE:C0_NFBGA

WIRELESS

PART NUMBER	QTY	DESCRIPTION	REFERENCE DES	CRITICAL	BOM OPTION
339S00458	1	IC,MODULE,HARPOON,HS7.7,LGA345	U3730	CRITICAL	

PMU

PART NUMBER	QTY	DESCRIPTION	REFERENCE DES	CRITICAL	BOM OPTION
338S00267	1	IC,PMU-A,D1449A0C,CALPE,CSP324,4X18X7.32	U7800	CRITICAL	

CHARGER IC

PART NUMBER	QTY	DESCRIPTION	REFERENCE DES	CRITICAL	BOM OPTION
353S01525	1	IC,TSL9240HTN30,PMU,SUOMA,WCSP40 2.1X3.3	U7000	CRITICAL	

AMR

PART NUMBER	QTY	DESCRIPTION	REFERENCE DES	CRITICAL	BOM OPTION
677-10581	2	SUBASSY (TAB) PCBA,AMR INTERPOSER,X941	J4800, J4801	CRITICAL	

DRAM

PART NUMBER	QTY	DESCRIPTION	REFERENCE DES	CRITICAL	BOM OPTION
333S00125	4	IC,SDRAM,LPDDR3-2133,16GBIT,21NM,B,BGA178	U2301,U2400,U2300,U2600	CRITICAL	DRAM:HY_8G
333S00069	4	IC,SDRAM,LPDDR3-2133,16GBIT,20NM,BGA178	U2301,U2400,U2300,U2600	CRITICAL	DRAM:MI_8G
333S00166	4	IC,SDRAM,LPDDR3-2133,16GBIT,20NM,BGA178	U2301,U2400,U2300,U2600	CRITICAL	DRAM:SS_8G
333S00126	4	IC,SDRAM,LPDDR3-2133,32GBIT,21NM,B,BGA178	U2301,U2400,U2300,U2600	CRITICAL	DRAM:HY_16G
333S00070	4	IC,SDRAM,LPDDR3-2133,32GBIT,20NM,BGA178	U2301,U2400,U2300,U2600	CRITICAL	DRAM:MI_16G
333S00167	4	IC,SDRAM,LPDDR3-2133,32GBIT,20NM,BGA178	U2301,U2400,U2300,U2600	CRITICAL	DRAM:SS_16G

NAND Parts

PART NUMBER	QTY	DESCRIPTION	REFERENCE DES	CRITICAL	BOM OPTION
335S00324	4	NAND,3DV3,85GBP,XXX,S4E,17GG,SD,ULGA110	U8400,U8700,U8800,U8900	CRITICAL	NAND:SD_256G
335S00329	4	NAND,3DV3,85GBP,XXX,S4E,17GG,T,ULGA110	U8400,U8700,U8800,U8900	CRITICAL	NAND:TO_256G
335S00325	4	NAND,3DV3,128GBP,XXX,S4E,17GG,SD,ULGA110	U8400,U8700,U8800,U8900	CRITICAL	NAND:SD_512G
335S00330	4	NAND,3DV3,128GBP,XXX,S4E,17GG,T,ULGA110	U8400,U8700,U8800,U8900	CRITICAL	NAND:TO_512G
335S00327	4	NAND,3DV3,85GBP,XXX,S4E,17GG,SD,ULGA110	U8400,U8700,U8800,U8900	CRITICAL	NAND:SD_1T
335S00321	4	NAND,3DV3,256GBP,S4E,256G,SS,ULGA110	U8400,U8700,U8800,U8900	CRITICAL	NAND:SS_1T
335S00332	4	NAND,3DV3,256GBP,XXX,S4E,17GG,T,ULGA110	U8400,U8700,U8800,U8900	CRITICAL	NAND:TO_1T
335S00322	4	NAND,3DV3,512GBM,S4E,256G,SS,ULGA110	U8400,U8700,U8800,U8900	CRITICAL	NAND:SS_2T
335S00244	4	NAND,3DV3,512GBM,S4E,256G,SS,ULGA110	U8400,U8700,U8800,U8900	CRITICAL	NAND:SS_2T_DOE
335S00302	4	NAND,3DV3,85GBP,XXX,S4E,17GG,SD,ULGA110	U8400,U8700,U8800,U8900	CRITICAL	NAND:SD_254G_DOE
998-11757	4	NAND,3DV3.85GBP,XXX,S4E,17GG,T,ULGA110	U8400,U8700,U8800,U8900	CRITICAL	NAND:TO_254G_DOE

NAND Alternate Parts

PART NUMBER	ALTERNATE FOR PART NUMBER	BOM OPTION	REF DES	COMMENTS:
335S00302	335S00324	NAND:SD_256G	ALL	SanDisk 256G Old
335S00290	335S00329	NAND:TO_256G	ALL	Toshiba 256G Old
998-12418	335S00329	NAND:TO_256G	ALL	Toshiba 256G Sub 1
998-12419	335S00329	NAND:TO_256G	ALL	Toshiba 256G Sub 2
335S00303	335S00325	NAND:SD_512G	ALL	SanDisk 512G Old
335S00291	335S00330	NAND:TO_512G	ALL	Toshiba 512G Old
998-12420	335S00330	NAND:TO_512G	ALL	Toshiba 512G Sub 1
998-12421	335S00330	NAND:TO_512G	ALL	Toshiba 512G Sub 2
335S00305	335S00327	NAND:SD_1T	ALL	SanDisk 1T Old
335S00293	335S00332	NAND:TO_1T	ALL	Toshiba 1T Old
998-12424	335S00332	NAND:TO_1T	ALL	Toshiba 1T Sub 1
998-12426	335S00332	NAND:TO_1T	ALL	Toshiba 1T Sub 2

Programmables (All Builds)

TBT ROMs

PART NUMBER	QTY	DESCRIPTION	REFERENCE DES	CRITICAL	BOM OPTION
335S00133	2	IC,SPI SERIAL FLASH,8MBITS,3.0V,USON8	U2890,UB090	CRITICAL	TBT_ROM:BLANK
341S00931	1	T29,TR1 (V1.1) PROTO-0,X941	U2890	CRITICAL	TBT_LT_ROM:P0
341S00932	1	T29,TR2 (V1.1) PROTO-1,X941	UB090	CRITICAL	TBT_RT_ROM:P0
341S00959	1	T29,TR1 (V5.1) DCB,X941	U2890	CRITICAL	TBT_LT_ROM:DCB
341S00960	1	T29,TR2 (V5.1) DCB,X941	UB090	CRITICAL	TBT_RT_ROM:DCB
341S00967	1	T29,TR1 (V5.52) PROTO-1,X941	U2890	CRITICAL	TBT_LT_ROM:P1
341S00968	1	T29,TR2 (V5.52) PROTO-1,X941	UB090	CRITICAL	TBT_RT_ROM:P1
341S01028	1	T29,TR1 (VXXXX) EVT,X941	U2890	CRITICAL	TBT_LT_ROM:EVT
341S01029	1	T29,TR2 (VXXXX) EVT,X941	UB090	CRITICAL	TBT_RT_ROM:EVT

BT ROM

PART NUMBER	QTY	DESCRIPTION	REFERENCE DES	CRITICAL	BOM OPTION
338S00256	1	IC,SPI SERIAL FLASH,8MBIT,1.8V,DFN8	U3750	CRITICAL	BT_ROM:BLANK
341S00965	1	IC,BT SFLASH ROM (V10.53.122) PROTO-0,X1190	U3750	CRITICAL	BT_ROM:P0
341S00965	1	IC,BT SFLASH ROM (V21) PROTO-1,11190	U3750	CRITICAL	BT_ROM:P1
341S01025	1	IC,BT SFLASH ROM (VXX) EVT,X1:90	U3750	CRITICAL	BT_ROM:EVT

BT ROM Alternate Parts

PART NUMBER	ALTERNATE FOR PART NUMBER	BOM OPTION	REF DES	COMMENTS:
338S00248	338S00256	BT_ROM:BLANK	U3750	Macronix
338S00255	338S00256	BT_ROM:BLANK	U3750	Adesto

WIFI ROM

PART NUMBER	QTY	DESCRIPTION	REFERENCE DES	CRITICAL	BOM OPTION
338S00214	1	IC,EEPROM,SER,UWIRE,16K,1.8/,DFN8	U3710	CRITICAL	WIFI_ROM:BLANK
341S00725	1	IC,WIFI ROM (V01) WW1,X465	U3710	CRITICAL	WIFI_ROM:P0

WIFI ROM Alternate Parts

PART NUMBER	ALTERNATE FOR PART NUMBER	BOM OPTION	REF DES	COMMENTS:
338S00216	338S00214	WIFI_ROM:BLANK	U3710	Rohm

Strategic Silicon

PART#	STRATEGIC VALUE	COMMENT
337S00456	08	CPU
333S00069	01	MEMORY
333S00070	01	MEMORY
333S00125	01	MEMORY
333S00126	01	MEMORY
333S00166	08	MEMORY
333S00167	08	MEMORY
339S00376	09	pSOC
339S00372	09	pSOC
338S00267	08	CALPE
335S00321	10	NAND
335S00322	10	NAND
335S00324	09	NAND
335S00325	09	NAND
335S00327	09	NAND
335S00329	09	NAND

PART#	STRATEGIC VALUE	COMMENT
335S00330	09	NAND
335S00332	09	NAND
338S00410	08	OCAKIRA
353S01442	05	ACE
338S00408	08	TITAN RIDGE
353S01138	09	DEMUX MUX2
353S01525	06	SUOMA
353S00928	06	IMVP8
353S00526	07	TPS62180
353S01077	02	ISL95808IRZ
353S01679	08	TAS5770L
338S00253	09	SECURE ELEMENT
353S84415	01	BACKLIGHT CONTROLLER
353S01320	08	MIPI SWITCH
338S1143	01	ACCELEROMETER

BTM_MASTER-BRAVO_244 BTM_DATE-11/27/2017

PAGE TITLE

BOM Configuration

Apple Inc.

DRAWING NUMBER 051-02166 SIZE D

REVISION 4.0.0

BRANCH evt-mars-0

PAGE 2 OF 150

SHEET 2 OF 108

NOTICE OF PROPRIETARY PROPERTY:
THE INFORMATION CONTAINED HEREIN IS THE PROPRIETARY PROPERTY OF APPLE INC.
THE POSSESSOR AGREES TO THE FOLLOWING:
I TO MAINTAIN THIS DOCUMENT IN CONFIDENCE
II NOT TO REPRODUCE OR COPY IT
III NOT TO REVEAL OR PUBLISH IT IN WHOLE OR PART
IV ALL RIGHTS RESERVED

BOM Groups

BOM GROUP	BOM OPTIONS
X941_COMMON	SCH,PCB,ALTERNATE,COMMON,X941_COMMON1,X941_COMMON2,X941_COMMON3,X941_PROGPARTS
X941_COMMON1	TDP_TR:C1,ACE:C2_WFBGA,SE:DSV_2017,PRGRN:36,SYSDET:FS7,TBTTURN_RES,BOARD_ID,BOARD_REV:108,RF_DOE
X941_COMMON2	EDP_ENABLE,XDP:YES,SETP_5V3V3:AUDIBLE
X941_COMMON3	LOADRC:YES
X941_PROGPARTS	TBT_LT_ROM:EVT,TBT_RT_ROM:EVT,WIFI_ROM:P0,BT_ROM:EVT
X941_DEVEL:ENG	ALTERNATE,EDP1_DBG,DAGLED,SOC_DDG,USBC_DBG,XDP_CONN:YES,WIFI_DBG,SSD_DBG,DOC_FAN,DEBUE_BUTTON,LOADISNS,AP_TEMP:YES,SENSOR:DEV,BOOTCFG0
X941_DEVEL:DVT	ALTERNATE,SOC_DBG,USBC_DBG,XDP_CONN:YES,WIFI_DBG
X941_DEVEL:PVT	ALTERNATE

Variable BOM Groups
Development/Base BOMs

PART NUMBER	QTY	DESCRIPTION	REFERENCE DES	CRITICAL	BOM OPTION
685-00187	1	COMMON PARTS,MLB,X941	BASE	CRITICAL	BASE_BOM
985-00366	1	DEV,MLB,X941	DEVEL	CRITICAL	DEVEL_BOM

NAND Configs

BOM GROUP	BOM OPTIONS
NANDCFG:SD_256G	NAND:SD_256G,SOC:B0_1G,NAND_VCC:2.5V
NANDCFG:TO_256G	NAND:TO_256G,SOC:B0_1G,NAND_VCC:2.5V
NANDCFG:SD_512G	NAND:SD_512G,SOC:B0_1G,NAND_VCC:2.5V
NANDCFG:TO_512G	NAND:TO_512G,SOC:B0_1G,NAND_VCC:2.5V
NANDCFG:SD_1T	NAND:SD_1T,SOC:B0_2G,NAND_VCC:2.5V
NANDCFG:SS_1T	NAND:SS_1T,SOC:B0_2G,NAND_VCC:2.5V
NANDCFG:TO_1T	NAND:TO_1T,SOC:B0_2G,NAND_VCC:2.5V
NANDCFG:SS_2T	NAND:SS_2T,SOC:B0_2G,NAND_VCC:2.5V
NANDCFG:SS_2T_DOE	NAND:SS_2T_DOE,SOC:B0_2G,NAND_VCC:2.7V
NANDCFG:SD_256G_DOE	NAND:SD_256G_DOE,SOC:B0_1G,NAND_VCC:2.5V
NANDCFG:TO_256G_DOE	NAND:TO_256G_DOE,SOC:B0_1G,NAND_VCC:2.5V

Main DRAM SPD Straps

BOM GROUP	BOM OPTIONS
DRAMCFG:HY_8G	DRAM:HY_8G,RAMCFG4_L,RAMCFG3_L,RAMCFG2_L,RAMCFG1_L,RAMCFG0_L
DRAMCFG:MI_8G	DRAM:MI_8G,RAMCFG4_L,RAMCFG3_L,RAMCFG2_L,RAMCFG1_L
DRAMCFG:SS_8G	DRAM:SS_8G,RAMCFG3_L,RAMCFG2_L,RAMCFG0_L
DRAMCFG:HY_16G	DRAM:HY_16G,RAMCFG4_L,RAMCFG3_L,RAMCFG1_L,RAMCFG0_L
DRAMCFG:MI_16G	DRAM:MI_16G,RAMCFG4_L,RAMCFG3_L,RAMCFG1_L
DRAMCFG:SS_16G	DRAM:SS_16G,RAMCFG3_L,RAMCFG0_L

CPU DRAM CFG Chart

DIE REV	CFG 4
A	0
B	1

SPEED	CFG 3
2133	0
3866	1

CAPACITY	CFG 2
8GB	0
16GB	1

VENDOR	CFG 1	CFG 0
HYNIX	0	0
MICRON	0	1
SAMSUNG	1	0
N/A	1	1

NotebookSchematics.com
Schematics, Boardviews & Smartphone Service Manuals

PAGE TITLE
BOM Configuration

Apple Inc.

DRAWING NUMBER 051-02166 SIZE D
REVISION 4.0.0
BRANCH evt-mars-0
PAGE 3 OF 150
SHEET 3 OF 108

NOTICE OF PROPRIETARY PROPERTY:
THE INFORMATION CONTAINED HEREIN IS THE PROPRIETARY PROPERTY OF APPLE INC.
THE POSSESSOR AGREES TO THE FOLLOWING:
I TO MAINTAIN THIS DOCUMENT IN CONFIDENCE
II NOT TO REPRODUCE OR COPY IT
III NOT TO REVEAL OR PUBLISH IT IN WHOLE OR PART
IV ALL RIGHTS RESERVED

BOARD MECHANICALS

Shield Cans - BOTTOM SIDE

TITAN RIDGE - LEFT (U2800) - 806-12859

SH0418 SM
FENCE-TITAN-RIDGE-X940

TITAN RIDGE - RIGHT (UB000) - 806-12859

SH0420 SM
FENCE-TITAN-RIDGE-X940

LPDDR3 (U2300 ~ U2600) - 806-15451

SH0415 SM
SHLD-MLB-LPDDR3-X940

NAND - BOTTOM SOUTH (U8700) - 806-12858

SH0417 SM
FENCE-MLB-BTM-NAND-X940

NAND - BOTTOM NORTH (U8900) - 806-12858

SH0419 SM
FENCE-MLB-BTM-NAND-X940

Shield Cans - TOP SIDE

SOC (U3900) - 806-12855

SH0412 SM
FENCE-MLB-BTM-H99M-X940

DIPLEXERS - 806-12854

SH0411 SM
SHLD-MLB-DIPLEXERS-X940

NAND - TOP SOUTH (U8600) - 806-12857

SH0416 SM
FENCE-MLB-NAND-TOP-SOUTH-X940

NAND - TOP NORTH (U8800) - 806-12856

SH0413 SM
FENCE-MLB-NAND-TOP-NORTH-X940

CPU SLED (U0500) - 806-12626
ONLY TABLE

SH0423 SM
SLED-METAL-X940

CPU SLED (U0500) - 806-12626
ONLY TABLE

SH0424 SM
SLED-METAL-X940

POGO PINS

LIO and RIO -2X (870-5071)

SH0471 POGO-2.00D-2.95H-SM SM
SH0472 POGO-2.00D-2.95H-SM SM

AROUND THE FAN AND CENTER - 8X (870-01518)

SH0463 POGO-2.30D-4.0H-SM SM
SH0464 POGO-2.30D-4.0H-SM SM
SH0465 POGO-2.30D-4.0H-SM SM
SH0466 POGO-2.30D-4.0H-SM SM
SH0467 POGO-2.30D-4.0H-SM SM
SH0468 POGO-2.30D-4.0H-SM SM
SH0469 POGO-2.30D-4.0H-SM SM
SH0470 POGO-2.30D-4.0H-SM SM

PART NUMBER	QTY	DESCRIPTION	REFERENCE DES	CRITICAL	BOM OPTION
806-14839	2	SLED,METAL,NAT NICKE,X940	SH0423,SH0424		

Cowling Bosses - BOTTOM SIDE

DFR TOUCH CONN (J4402) - 860-00414

SH0425 6.25X3.85R-1.75ID-1.938H-SM

USB-C CONN - LIO (J3300) - 860-00392

SH0445 3.40D1.75ID-1.12H-SM
SH0446 3.40D1.75ID-1.12H-SM

DFR DISPLAY CONN (J4401) - 860-00412

SH0426 3.40D1.75ID-1.7H-SM
SH0427 3.40D1.75ID-1.7H-SM

IPD CONN (J4501) - 860-00412

SH0428 3.40D1.75ID-1.7H-SM
SH0429 3.40D1.75ID-1.7H-SM

KBD CONN (J4500) - 860-00412

SH0430 3.40D1.75ID-1.7H-SM
SH0431 3.40D1.75ID-1.7H-SM

USB-C CONN - RIO (JB500) - 860-00392

SH0447 3.40D1.75ID-1.12H-SM
SH0448 3.40D1.75ID-1.12H-SM

AUDIO JACK CONN (J6600) - 860-00829

SH0432 2.7X1.8R-1.41ID-1.64H-SM

MESA CONN (J4900) - 860-00829

SH0433 2.7X1.8R-1.41ID-1.64H-SM

Shield CAN Alignment Slots 14X - 998-04440 (1.2mm X 0.4mm)

SH0449 TH-NSP SL-1.2X0.4-1.5X0.7
SH0450 TH-NSP SL-1.2X0.4-1.5X0.7
SH0451 TH-NSP SL-1.2X0.4-1.5X0.7
SH0452 TH-NSP SL-1.2X0.4-1.5X0.7
SH0453 TH-NSP SL-1.2X0.4-1.5X0.7
SH0454 TH-NSP SL-1.2X0.4-1.5X0.7
SH0455 TH-NSP SL-1.2X0.4-1.5X0.7
SH0457 TH-NSP SL-1.2X0.4-1.5X0.7
SH0458 TH-NSP SL-1.2X0.4-1.5X0.7
SH0459 TH-NSP SL-1.2X0.4-1.5X0.7
SH0460 TH-NSP SL-1.2X0.4-1.5X0.7
SH0461 TH-NSP SL-1.2X0.4-1.5X0.7

Thermal Stage Mounting Holes

Plated Through Hole - 3.15mm - APN 998-0845

SH0490 3P9R3P15

Plated Through Hole - 3.6mm - APN 998-03850

SH0491 4.0R3.6-NSP
SH0492 4.0R3.6-NSP
SH0493 4.0R3.6-NSP

TOP Rubber Mount Standoffs - 12X - (860-00430)

SH0400 2.80D1.21D-1.435H-SM
SH0401 2.80D1.21D-1.435H-SM
SH0402 2.80D1.21D-1.435H-SM
SH0403 2.80D1.21D-1.435H-SM
SH0404 2.80D1.21D-1.435H-SM
SH0405 2.80D1.21D-1.435H-SM
SH0406 2.80D1.21D-1.435H-SM
SH0407 2.80D1.21D-1.435H-SM
SH0408 2.80D1.21D-1.435H-SM
SH0409 2.80D1.21D-1.435H-SM
SH0410 2.80D1.21D-1.435H-SM
SH0436 2.80D1.21D-1.435H-SM

Bottom Rubber Mount Standoffs - 1X - (860-00476)

SH0437 2.80D1.21D-3.25H-SM

Cowling Bosses - TOP SIDE

eDP CONN (J8500) - 860-00415

SH0421 3.40D1.75ID-0.844H-SM
SH0422 3.40D1.75ID-0.844H-SM

BOM_COST_GROUP=MECHANICALS

SYNC_MASTER=J79A_MLB SYNC_DATE=01/31/2017

PAGE TITLE
PD Parts

Apple Inc.

DRAWING NUMBER 051-02166
SIZE D
REVISION 4.0.0
BRANCH evt-mars-0
PAGE 4 OF 150
SHEET 4 OF 108

NOTICE OF PROPRIETARY PROPERTY:
THE INFORMATION CONTAINED HEREIN IS THE PROPRIETARY PROPERTY OF APPLE INC. THE POSSESSOR AGREES TO THE FOLLOWING:
I TO MAINTAIN THIS DOCUMENT IN CONFIDENCE
II NOT TO REPRODUCE OR COPY IT
III NOT TO REVEAL OR PUBLISH IT IN WHOLE OR PART
IV ALL RIGHTS RESERVED

NotebookSchematics.com
Schematics, Boardviews & Smartphone Service Manuals

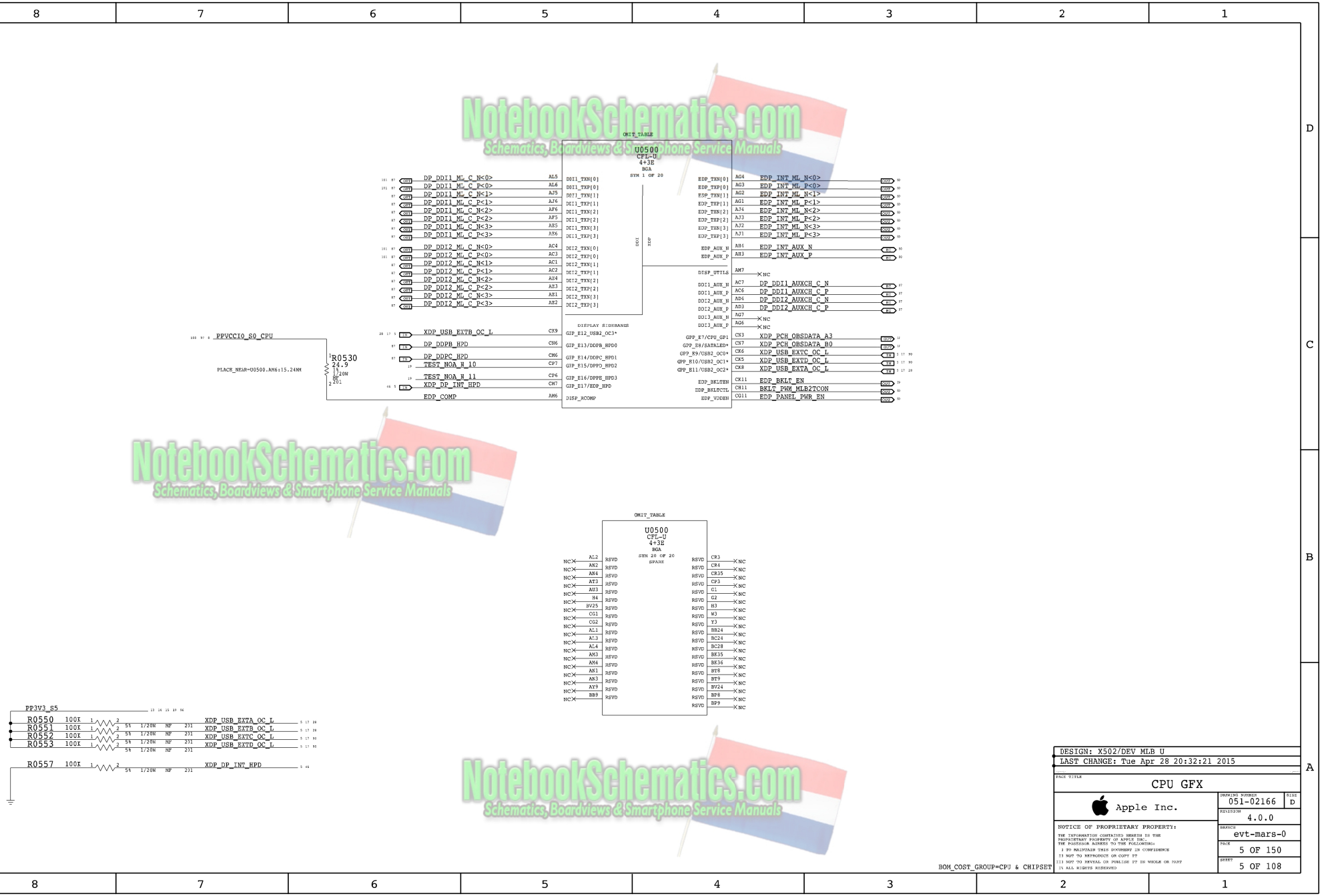

BOM_COST_GROUP=CPU & CHIPSET

DESIGN: X502/DEV MLB U
LAST CHANGE: Tue Apr 28 20:32:21 2015

PAGE TITLE
CPU GFX

Apple Inc.

DRAWING NUMBER 051-02166
SIZE D
REVISION 4.0.0
BRANCH evt-mars-0
PAGE 5 OF 150
SHEET 5 OF 108

NOTICE OF PROPRIETARY PROPERTY:
THE INFORMATION CONTAINED HEREIN IS THE PROPRIETARY PROPERTY OF APPLE INC. THE POSSESSOR AGREES TO THE FOLLOWING:
I TO MAINTAIN THIS DOCUMENT IN CONFIDENCE
II NOT TO REPRODUCE OR COPY IT
III NOT TO REVEAL OR PUBLISH IT IN WHOLE OR PART
IV ALL RIGHTS RESERVED

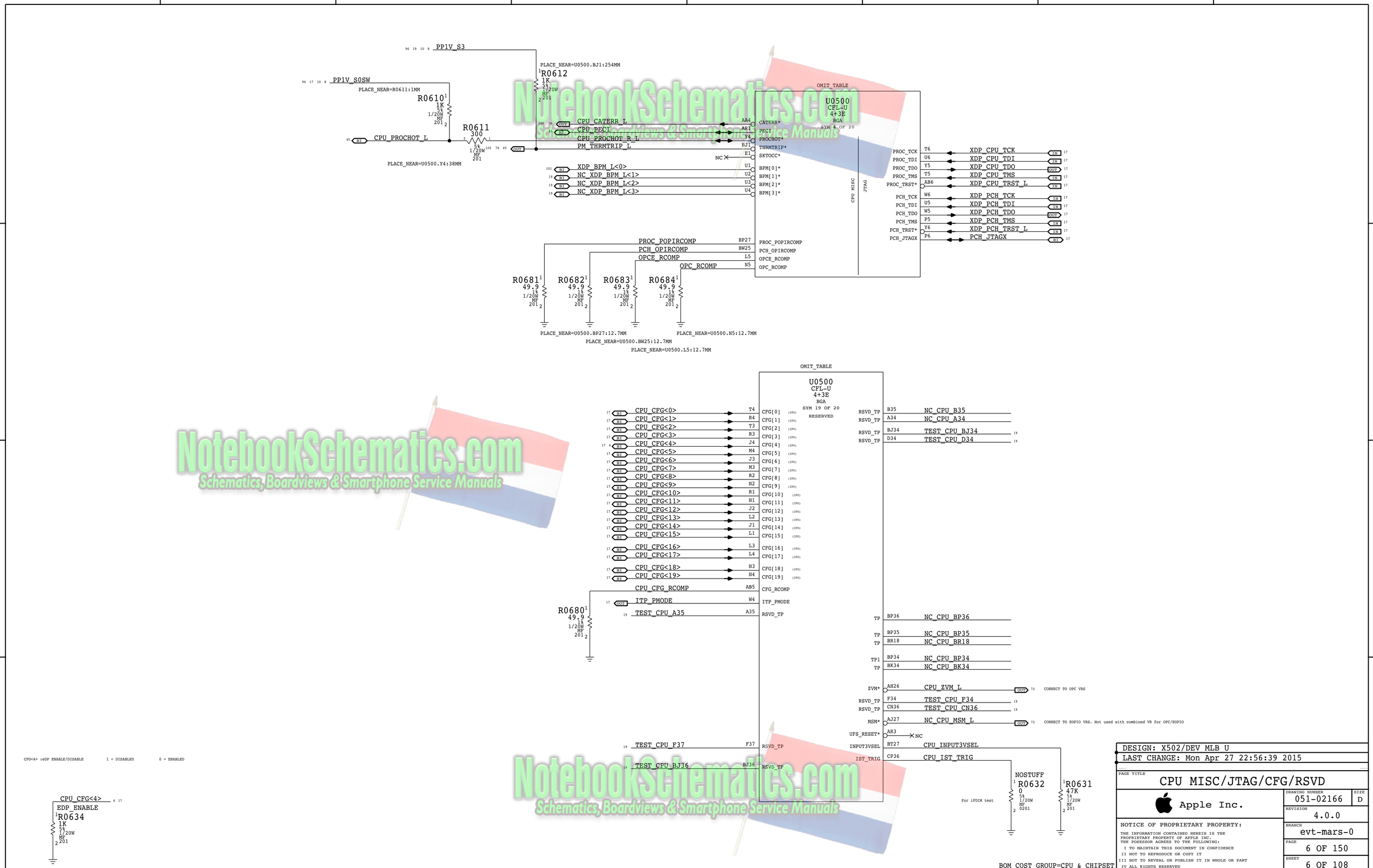
PP1V_S3
PLACE_NEAR=U0500.BJ1:254MM
R0612 1K 5% 1/20W MF 201
PP1V_S0SW
PLACE_NEAR=R0611:1MM
R0610 1K 5% 1/20W MF 201
R0611 300 5% 1/20W MF 201
CPU_PROCHOT_L
PLACE_NEAR=U0500.Y4:38MM
CPU_CATERR_L
CPU_PECI
CPU_PROCHOT_R_L
PM_THRMTRIP_L
XDP_BPM_L<0>
NC_XDP_BPM_L<1>
NC_XDP_BPM_L<2>
NC_XDP_BPM_L<3>
OMIT_TABLE
U0500
CFL-U
4+3E
BGA
SYM 4 OF 20
CATERR*
PECI
PROCHOT*
THRMTRIP*
SKTOCC*
BPM[0]*
BPM[1]*
BPM[2]*
BPM[3]*
CPU MISC
JTAG
PROC_TCK
PROC_TDI
PROC_TDO
PROC_TMS
PROC_TRST*
PCH_TCK
PCH_TDI
PCH_TDO
PCH_TMS
PCH_TRST*
PCH_JTAGX
XDP_CPU_TCK
XDP_CPU_TDI
XDP_CPU_TDO
XDP_CPU_TMS
XDP_CPU_TRST_L
XDP_PCH_TCK
XDP_PCH_TDI
XDP_PCH_TDO
XDP_PCH_TMS
XDP_PCH_TRST_L
PCH_JTAGX
PROC_POPIRCOMP
PCH_OPIRCOMP
OPCE_RCOMP
OPC_RCOMP
R0681 49.9 1% 1/20W MF 201
R0682 49.9 1% 1/20W MF 201
R0683 49.9 1% 1/20W MF 201
R0684 49.9 1% 1/20W MF 201
PLACE_NEAR=U0500.BP27:12.7MM
PLACE_NEAR=U0500.BW25:12.7MM
PLACE_NEAR=U0500.L5:12.7MM
PLACE_NEAR=U0500.N5:12.7MM
CPU_CFG<0>
CPU_CFG<1>
CPU_CFG<2>
CPU_CFG<3>
CPU_CFG<4>
CPU_CFG<5>
CPU_CFG<6>
CPU_CFG<7>
CPU_CFG<8>
CPU_CFG<9>
CPU_CFG<10>
CPU_CFG<11>
CPU_CFG<12>
CPU_CFG<13>
CPU_CFG<14>
CPU_CFG<15>
CPU_CFG<16>
CPU_CFG<17>
CPU_CFG<18>
CPU_CFG<19>
CPU_CFG_RCOMP
ITP_PMODE
TEST_CPU_A35
R0680 49.9 1% 1/20W MF 201
RESERVED
NC_CPU_B35
NC_CPU_A34
TEST_CPU_BJ34
TEST_CPU_D34
NC_CPU_BP36
NC_CPU_BP35
NC_CPU_BR18
NC_CPU_BP34
NC_CPU_BK34
CPU_ZVM_L
CONNECT TO OPC VRS
TEST_CPU_F34
TEST_CPU_CN36
NC_CPU_MSM_L
CONNECT TO EOPIO VRS. Not used with combined VR for OPC/EOPIO
CPU_INPUT3VSEL
CPU_IST_TRIG
TEST_CPU_F37
TEST_CPU_BJ36
NOSTUFF R0632 0 5% 1/20W MF 0201
For iFDIM test
R0631 47K 5% 1/20W MF 201
CPU_CFG<4>
EDP_ENABLE
R0634 1K 5% 1/20W MF 201
CFG<4> :eDP ENABLE/DISABLE 1 = DISABLED 0 = ENABLED
BOM_COST_GROUP=CPU & CHIPSET
DESIGN: X502/DEV MLB U
LAST CHANGE: Mon Apr 27 22:56:39 2015
PAGE TITLE
CPU MISC/JTAG/CFG/RSVD
Apple Inc.
DRAWING NUMBER 051-02166
SIZE D
REVISION 4.0.0
BRANCH evt-mars-0
PAGE 6 OF 150
SHEET 6 OF 108
NOTICE OF PROPRIETARY PROPERTY:
THE INFORMATION CONTAINED HEREIN IS THE PROPRIETARY PROPERTY OF APPLE INC.
THE POSESSOR AGREES TO THE FOLLOWING:
I TO MAINTAIN THIS DOCUMENT IN CONFIDENCE
II NOT TO REPRODUCE OR COPY IT
III NOT TO REVEAL OR PUBLISH IT IN WHOLE OR PART
IV ALL RIGHTS RESERVED

OMIT_TABLE

U0500 CFL-U 4+3E BGA SYM 2 OF 20

LPDDR3 NON-INTERLEAVED0

Signal	Pin	Net	Dir
DDR0_DQ[0]	A26	MEM_A_DQ<0>	BI
DDR0_DQ[1]	D26	MEM_A_DQ<1>	BI
DDR0_DQ[2]	D28	MEM_A_DQ<2>	BI
DDR0_DQ[3]	C28	MEM_A_DQ<3>	BI
DDR0_DQ[4]	B26	MEM_A_DQ<4>	BI
DDR0_DQ[5]	C26	MEM_A_DQ<5>	BI
DDR0_DQ[6]	B28	MEM_A_DQ<6>	BI
DDR0_DQ[7]	A28	MEM_A_DQ<7>	BI
DDR0_DQ[8]	B30	MEM_A_DQ<8>	BI
DDR0_DQ[9]	D30	MEM_A_DQ<9>	BI
DDR0_DQ[10]	B33	MEM_A_DQ<10>	BI
DDR0_DQ[11]	D32	MEM_A_DQ<11>	BI
DDR0_DQ[12]	A30	MEM_A_DQ<12>	BI
DDR0_DQ[13]	C30	MEM_A_DQ<13>	BI
DDR0_DQ[14]	B32	MEM_A_DQ<14>	BI
DDR0_DQ[15]	C32	MEM_A_DQ<15>	BI
DDR0_DQ[16]	J22	MEM_A_DQ<16>	BI
DDR0_DQ[17]	H25	MEM_A_DQ<17>	BI
DDR0_DQ[18]	G22	MEM_A_DQ<18>	BI
DDR0_DQ[19]	H22	MEM_A_DQ<19>	BI
DDR0_DQ[20]	F25	MEM_A_DQ<20>	BI
DDR0_DQ[21]	J25	MEM_A_DQ<21>	BI
DDR0_DQ[22]	G25	MEM_A_DQ<22>	BI
DDR0_DQ[23]	F22	MEM_A_DQ<23>	BI
DDR0_DQ[24]	D22	MEM_A_DQ<24>	BI
DDR0_DQ[25]	C22	MEM_A_DQ<25>	BI
DDR0_DQ[26]	C24	MEM_A_DQ<26>	BI
DDR0_DQ[27]	D24	MEM_A_DQ<27>	BI
DDR0_DQ[28]	A22	MEM_A_DQ<28>	BI
DDR0_DQ[29]	B22	MEM_A_DQ<29>	BI
DDR0_DQ[30]	A24	MEM_A_DQ<30>	BI
DDR0_DQ[31]	B24	MEM_A_DQ<31>	BI
DDR0_DQ[32]	H37	MEM_A_DQ<32>	BI
DDR0_DQ[33]	H34	MEM_A_DQ<33>	BI
DDR0_DQ[34]	K34	MEM_A_DQ<34>	BI
DDR0_DQ[35]	K35	MEM_A_DQ<35>	BI
DDR0_DQ[36]	H36	MEM_A_DQ<36>	BI
DDR0_DQ[37]	H35	MEM_A_DQ<37>	BI
DDR0_DQ[38]	K36	MEM_A_DQ<38>	BI
DDR0_DQ[39]	K37	MEM_A_DQ<39>	BI
DDR0_DQ[40]	N36	MEM_A_DQ<40>	BI
DDR0_DQ[41]	N34	MEM_A_DQ<41>	BI
DDR0_DQ[42]	R37	MEM_A_DQ<42>	BI
DDR0_DQ[43]	R34	MEM_A_DQ<43>	BI
DDR0_DQ[44]	N37	MEM_A_DQ<44>	BI
DDR0_DQ[45]	N35	MEM_A_DQ<45>	BI
DDR0_DQ[46]	R36	MEM_A_DQ<46>	BI
DDR0_DQ[47]	R35	MEM_A_DQ<47>	BI
DDR0_DQ[48]	G31	MEM_A_DQ<48>	BI
DDR0_DQ[49]	G32	MEM_A_DQ<49>	BI
DDR0_DQ[50]	H29	MEM_A_DQ<50>	BI
DDR0_DQ[51]	H28	MEM_A_DQ<51>	BI
DDR0_DQ[52]	G28	MEM_A_DQ<52>	BI
DDR0_DQ[53]	G29	MEM_A_DQ<53>	BI
DDR0_DQ[54]	H31	MEM_A_DQ<54>	BI
DDR0_DQ[55]	H32	MEM_A_DQ<55>	BI
DDR0_DQ[56]	L31	MEM_A_DQ<56>	BI
DDR0_DQ[57]	L32	MEM_A_DQ<57>	BI
DDR0_DQ[58]	N29	MEM_A_DQ<58>	BI
DDR0_DQ[59]	N28	MEM_A_DQ<59>	BI
DDR0_DQ[60]	L28	MEM_A_DQ<60>	BI
DDR0_DQ[61]	L29	MEM_A_DQ<61>	BI
DDR0_DQ[62]	N31	MEM_A_DQ<62>	BI
DDR0_DQ[63]	N32	MEM_A_DQ<63>	BI

Signal	Pin	Net	Dir
DDR0_CKP[0]	V31	MEM_A_CLK_P<0>	OUT 21 25
DDR0_CKN[0]	V32	MEM_A_CLK_N<0>	OUT 21 25
DDR0_CKP[1]	T31	MEM_A_CLK_P<1>	OUT 22 25
DDR0_CKN[1]	T32	MEM_A_CLK_N<1>	OUT 22 25
DDR0_CKE[0]	U36	MEM_A_CKE<0>	OUT 21 25
DDR0_CKE[1]	U37	MEM_A_CKE<1>	OUT 21 25
DDR0_CKE[2]	U34	MEM_A_CKE<2>	OUT 22 25
DDR0_CKE[3]	U35	MEM_A_CKE<3>	OUT 22 25
DDR0_CS*[0]	AE32	MEM_A_CS_L<0>	OUT 21 22 25
DDR0_CS*[1]	AF32	MEM_A_CS_L<1>	OUT 21 22 25
DDR0_ODT[0]	AE31	MEM_A_ODT<0>	OUT 21 22 25
NC/DDR0_ODT[1]	AF31	NC	
DDR0_CAA[0]	AB35	MEM_A_CAA<0>	OUT 21 25
DDR0_CAA[1]	W36	MEM_A_CAA<1>	OUT 21 25
DDR0_CAA[2]	AA37	MEM_A_CAA<2>	OUT 21 25
DDR0_CAA[3]	AB34	MEM_A_CAA<3>	OUT 21 25
DDR0_CAA[4]	AA36	MEM_A_CAA<4>	OUT 21 25
DDR0_CAA[5]	V34	MEM_A_CAA<5>	OUT 21 25
DDR0_CAA[6]	AA34	MEM_A_CAA<6>	OUT 21 25
DDR0_CAA[7]	W34	MEM_A_CAA<7>	OUT 21 25
DDR0_CAA[8]	V35	MEM_A_CAA<8>	OUT 21 25
DDR0_CAA[9]	W35	MEM_A_CAA<9>	OUT 21 25
DDR0_CAB[0]	AC32	MEM_A_CAB<0>	OUT 22 25
DDR0_CAB[1]	AB32	MEM_A_CAB<1>	OUT 22 25
DDR0_CAB[2]	AC31	MEM_A_CAB<2>	OUT 22 25
DDR0_CAB[3]	Y32	MEM_A_CAB<3>	OUT 22 25
DDR0_CAB[4]	W32	MEM_A_CAB<4>	OUT 22 25
DDR0_CAB[5]	AC34	MEM_A_CAB<5>	OUT 22 25
DDR0_CAB[6]	AB31	MEM_A_CAB<6>	OUT 22 25
DDR0_CAB[7]	Y31	MEM_A_CAB<7>	OUT 22 25
DDR0_CAB[8]	AC36	MEM_A_CAB<8>	OUT 22 25
DDR0_CAB[9]	AC37	MEM_A_CAB<9>	OUT 22 25
DDR0_DQSN[0]	C27	MEM_A_DQS_N<0>	BI 99
DDR0_DQSN[1]	D31	MEM_A_DQS_N<1>	BI 99
DDR0_DQSN[2]	H24	MEM_A_DQS_N<2>	BI 99
DDR0_DQSN[3]	C23	MEM_A_DQS_N<3>	BI 99
DDR0_DQSN[4]	J35	MEM_A_DQS_N<4>	BI 99
DDR0_DQSN[5]	P34	MEM_A_DQS_N<5>	BI 99
DDR0_DQSN[6]	G30	MEM_A_DQS_N<6>	BI 99
DDR0_DQSN[7]	L30	MEM_A_DQS_N<7>	BI 99
DDR0_DQSP[0]	D27	MEM_A_DQS_P<0>	BI 99
DDR0_DQSP[1]	C31	MEM_A_DQS_P<1>	BI 99
DDR0_DQSP[2]	G24	MEM_A_DQS_P<2>	BI 99
DDR0_DQSP[3]	D23	MEM_A_DQS_P<3>	BI 99
DDR0_DQSP[4]	J34	MEM_A_DQS_P<4>	BI 99
DDR0_DQSP[5]	P35	MEM_A_DQS_P<5>	BI 99
DDR0_DQSP[6]	H30	MEM_A_DQS_P<6>	BI 99
DDR0_DQSP[7]	N30	MEM_A_DQS_P<7>	BI 99
NC/DDR0_ALERT_L	W37	NC	
NC/DDR0_PAR	W31	NC	
NC/DDR0_MA[3]	AC35	NC	
NC/DDR0_MA[4]	AA35	NC	
DDR_VREF_CA	F36	CPU_DIMM_VREFCA	OUT 20
DDR0_VREF_DQ[0]	D35	CPU_DIMMA_VREFDQ	OUT 20
DDR0_VREF_DQ[1]	D37	NC	
DDR1_VREF_DQ	E36	CPU_DIMMB_VREFDQ	OUT 20
DDR_VTT_CNTL	C35	PM_MEMVTT_EN	OUT 77

OMIT_TABLE

U0500 CFL-U 4+3E BGA SYM 3 OF 20

LPDDR3 NON-INTERLEAVED

Signal	Pin	Net	Dir
DDR1_DQ[0]	AN35	MEM_B_DQ<0>	BI
DDR1_DQ[1]	AN34	MEM_B_DQ<1>	BI
DDR1_DQ[2]	AR35	MEM_B_DQ<2>	BI
DDR1_DQ[3]	AR34	MEM_B_DQ<3>	BI
DDR1_DQ[4]	AN37	MEM_B_DQ<4>	BI
DDR1_DQ[5]	AN36	MEM_B_DQ<5>	BI
DDR1_DQ[6]	AR36	MEM_B_DQ<6>	BI
DDR1_DQ[7]	AR37	MEM_B_DQ<7>	BI
DDR1_DQ[8]	AU35	MEM_B_DQ<8>	BI
DDR1_DQ[9]	AU34	MEM_B_DQ<9>	BI
DDR1_DQ[10]	AW35	MEM_B_DQ<10>	BI
DDR1_DQ[11]	AW34	MEM_B_DQ<11>	BI
DDR1_DQ[12]	AU37	MEM_B_DQ<12>	BI
DDR1_DQ[13]	AU36	MEM_B_DQ<13>	BI
DDR1_DQ[14]	AW36	MEM_B_DQ<14>	BI
DDR1_DQ[15]	AW37	MEM_B_DQ<15>	BI
DDR1_DQ[16]	AJ29	MEM_B_DQ<16>	BI
DDR1_DQ[17]	AJ30	MEM_B_DQ<17>	BI
DDR1_DQ[18]	AM32	MEM_B_DQ<18>	BI
DDR1_DQ[19]	AM31	MEM_B_DQ<19>	BI
DDR1_DQ[20]	AM30	MEM_B_DQ<20>	BI
DDR1_DQ[21]	AM29	MEM_B_DQ<21>	BI
DDR1_DQ[22]	AJ31	MEM_B_DQ<22>	BI
DDR1_DQ[23]	AJ32	MEM_B_DQ<23>	BI
DDR1_DQ[24]	AR31	MEM_B_DQ<24>	BI
DDR1_DQ[25]	AR32	MEM_B_DQ<25>	BI
DDR1_DQ[26]	AV30	MEM_B_DQ<26>	BI
DDR1_DQ[27]	AV29	MEM_B_DQ<27>	BI
DDR1_DQ[28]	AR30	MEM_B_DQ<28>	BI
DDR1_DQ[29]	AR29	MEM_B_DQ<29>	BI
DDR1_DQ[30]	AV32	MEM_B_DQ<30>	BI
DDR1_DQ[31]	AV31	MEM_B_DQ<31>	BI
DDR1_DQ[32]	BA35	MEM_B_DQ<32>	BI
DDR1_DQ[33]	BA34	MEM_B_DQ<33>	BI
DDR1_DQ[34]	BC35	MEM_B_DQ<34>	BI
DDR1_DQ[35]	BC34	MEM_B_DQ<35>	BI
DDR1_DQ[36]	BA37	MEM_B_DQ<36>	BI
DDR1_DQ[37]	BA36	MEM_B_DQ<37>	BI
DDR1_DQ[38]	BC36	MEM_B_DQ<38>	BI
DDR1_DQ[39]	BC37	MEM_B_DQ<39>	BI
DDR1_DQ[40]	BE35	MEM_B_DQ<40>	BI
DDR1_DQ[41]	BE34	MEM_B_DQ<41>	BI
DDR1_DQ[42]	BG35	MEM_B_DQ<42>	BI
DDR1_DQ[43]	BG34	MEM_B_DQ<43>	BI
DDR1_DQ[44]	BE37	MEM_B_DQ<44>	BI
DDR1_DQ[45]	BE36	MEM_B_DQ<45>	BI
DDR1_DQ[46]	BG36	MEM_B_DQ<46>	BI
DDR1_DQ[47]	BG37	MEM_B_DQ<47>	BI
DDR1_DQ[48]	BA32	MEM_B_DQ<48>	BI
DDR1_DQ[49]	BA31	MEM_B_DQ<49>	BI
DDR1_DQ[50]	BD31	MEM_B_DQ<50>	BI
DDR1_DQ[51]	BD32	MEM_B_DQ<51>	BI
DDR1_DQ[52]	BA30	MEM_B_DQ<52>	BI
DDR1_DQ[53]	BA29	MEM_B_DQ<53>	BI
DDR1_DQ[54]	BD29	MEM_B_DQ<54>	BI
DDR1_DQ[55]	BD30	MEM_B_DQ<55>	BI
DDR1_DQ[56]	BG31	MEM_B_DQ<56>	BI
DDR1_DQ[57]	BG32	MEM_B_DQ<57>	BI
DDR1_DQ[58]	BK32	MEM_B_DQ<58>	BI
DDR1_DQ[59]	BK31	MEM_B_DQ<59>	BI
DDR1_DQ[60]	BG29	MEM_B_DQ<60>	BI
DDR1_DQ[61]	BG30	MEM_B_DQ<61>	BI
DDR1_DQ[62]	BK30	MEM_B_DQ<62>	BI
DDR1_DQ[63]	BK29	MEM_B_DQ<63>	BI

Signal	Pin	Net	Dir
DDR1_CKP[0]	AF29	MEM_B_CLK_P<0>	OUT 23 25
DDR1_CKN[0]	AF28	MEM_B_CLK_N<0>	OUT 23 25
DDR1_CKP[1]	AE29	MEM_B_CLK_P<1>	OUT 24 25
DDR1_CKN[1]	AE28	MEM_B_CLK_N<1>	OUT 24 25
DDR1_CKE[0]	T28	MEM_B_CKE<0>	OUT 23 25
DDR1_CKE[1]	T29	MEM_B_CKE<1>	OUT 23 25
DDR1_CKE[2]	V28	MEM_B_CKE<2>	OUT 24 25
DDR1_CKE[3]	V29	MEM_B_CKE<3>	OUT 24 25
DDR1_CS*[0]	AL37	MEM_B_CS_L<0>	OUT 23 24 25
DDR1_CS*[1]	AL35	MEM_B_CS_L<1>	OUT 23 24 25
DDR1_ODT[0]	AL36	MEM_B_ODT<0>	OUT 23 24 25
NC/DDR1_ODT[1]	AL34	NC	
DDR1_CAA[0]	AF35	MEM_B_CAA<0>	OUT 23 25
DDR1_CAA[1]	AB29	MEM_B_CAA<1>	OUT 23 25
DDR1_CAA[2]	AE37	MEM_B_CAA<2>	OUT 23 25
DDR1_CAA[3]	AE36	MEM_B_CAA<3>	OUT 23 25
DDR1_CAA[4]	AC29	MEM_B_CAA<4>	OUT 23 25
DDR1_CAA[5]	W29	MEM_B_CAA<5>	OUT 23 25
DDR1_CAA[6]	AB28	MEM_B_CAA<6>	OUT 23 25
DDR1_CAA[7]	AC28	MEM_B_CAA<7>	OUT 23 25
DDR1_CAA[8]	W28	MEM_B_CAA<8>	OUT 23 25
DDR1_CAA[9]	Y28	MEM_B_CAA<9>	OUT 23 25
DDR1_CAB[0]	AK35	MEM_B_CAB<0>	OUT 24 25
DDR1_CAB[1]	AK34	MEM_B_CAB<1>	OUT 24 25
DDR1_CAB[2]	AJ35	MEM_B_CAB<2>	OUT 24 25
DDR1_CAB[3]	AJ34	MEM_B_CAB<3>	OUT 24 25
DDR1_CAB[4]	AJ37	MEM_B_CAB<4>	OUT 24 25
DDR1_CAB[5]	AF34	MEM_B_CAB<5>	OUT 24 25
DDR1_CAB[6]	AJ36	MEM_B_CAB<6>	OUT 24 25
DDR1_CAB[7]	AG34	MEM_B_CAB<7>	OUT 24 25
DDR1_CAB[8]	AG35	MEM_B_CAB<8>	OUT 24 25
DDR1_CAB[9]	AG36	MEM_B_CAB<9>	OUT 24 25
DDR1_DQSN[0]	AP35	MEM_B_DQS_N<0>	BI 99
DDR1_DQSN[1]	AV34	MEM_B_DQS_N<1>	BI 99
DDR1_DQSN[2]	AL31	MEM_B_DQS_N<2>	BI 99
DDR1_DQSN[3]	AU31	MEM_B_DQS_N<3>	BI 99
DDR1_DQSN[4]	BB35	MEM_B_DQS_N<4>	BI 99
DDR1_DQSN[5]	BF34	MEM_B_DQS_N<5>	BI 99
DDR1_DQSN[6]	BC31	MEM_B_DQS_N<6>	BI 99
DDR1_DQSN[7]	BH31	MEM_B_DQS_N<7>	BI 99
DDR1_DQSP[0]	AP34	MEM_B_DQS_P<0>	BI 99
DDR1_DQSP[1]	AV35	MEM_B_DQS_P<1>	BI 99
DDR1_DQSP[2]	AL30	MEM_B_DQS_P<2>	BI 99
DDR1_DQSP[3]	AU30	MEM_B_DQS_P<3>	BI 99
DDR1_DQSP[4]	BB34	MEM_B_DQS_P<4>	BI 99
DDR1_DQSP[5]	BF35	MEM_B_DQS_P<5>	BI 99
DDR1_DQSP[6]	BC30	MEM_B_DQS_P<6>	BI 99
DDR1_DQSP[7]	BH30	MEM_B_DQS_P<7>	BI 99
NC/DDR1_ALERT_L	Y29	NC	
NC/DDR1_PAR	AE34	NC	
NC/DDR1_MA[3]	AG37	NC	
NC/DDR1_MA[4]	AE35	NC	
DRAM_RESET*	BU31	NC	
DDR_COMP[0]	BN28	CPU_DDR_RCOMP<0>	
DDR_COMP[1]	BN27	CPU_DDR_RCOMP<1>	
DDR_COMP[2]	BN29	CPU_DDR_RCOMP<2>	

R0700 162 1% 1/20W MF 201 — PLACE_NEAR=U0500.BN29:6MM

R0701 80.6 1% 1/20W MF 201 — PLACE_NEAR=U0500.BN27:6MM

R0702 200 1% 1/20W MF 201 — PLACE_NEAR=U0500.BN28:6MM

BOM_COST_GROUP=CPU & CHIPSET

SYNC_MASTER=J132_GAREN SYNC_DATE=02/03/2017

PAGE TITLE: CPU LPDDR3 Interface

Apple Inc.

DRAWING NUMBER: 051-02166 SIZE: D

REVISION: 4.0.0

BRANCH: evt-mars-0

PAGE: 7 OF 150

SHEET: 7 OF 108

NOTICE OF PROPRIETARY PROPERTY:
THE INFORMATION CONTAINED HEREIN IS THE PROPRIETARY PROPERTY OF APPLE INC.
THE POSESSOR AGREES TO THE FOLLOWING:
I TO MAINTAIN THIS DOCUMENT IN CONFIDENCE
II NOT TO REPRODUCE OR COPY IT
III NOT TO REVEAL OR PUBLISH IT IN WHOLE OR PART
IV ALL RIGHTS RESERVED

NotebookSchematics.com
Schematics, Boardviews & Smartphone Service Manuals

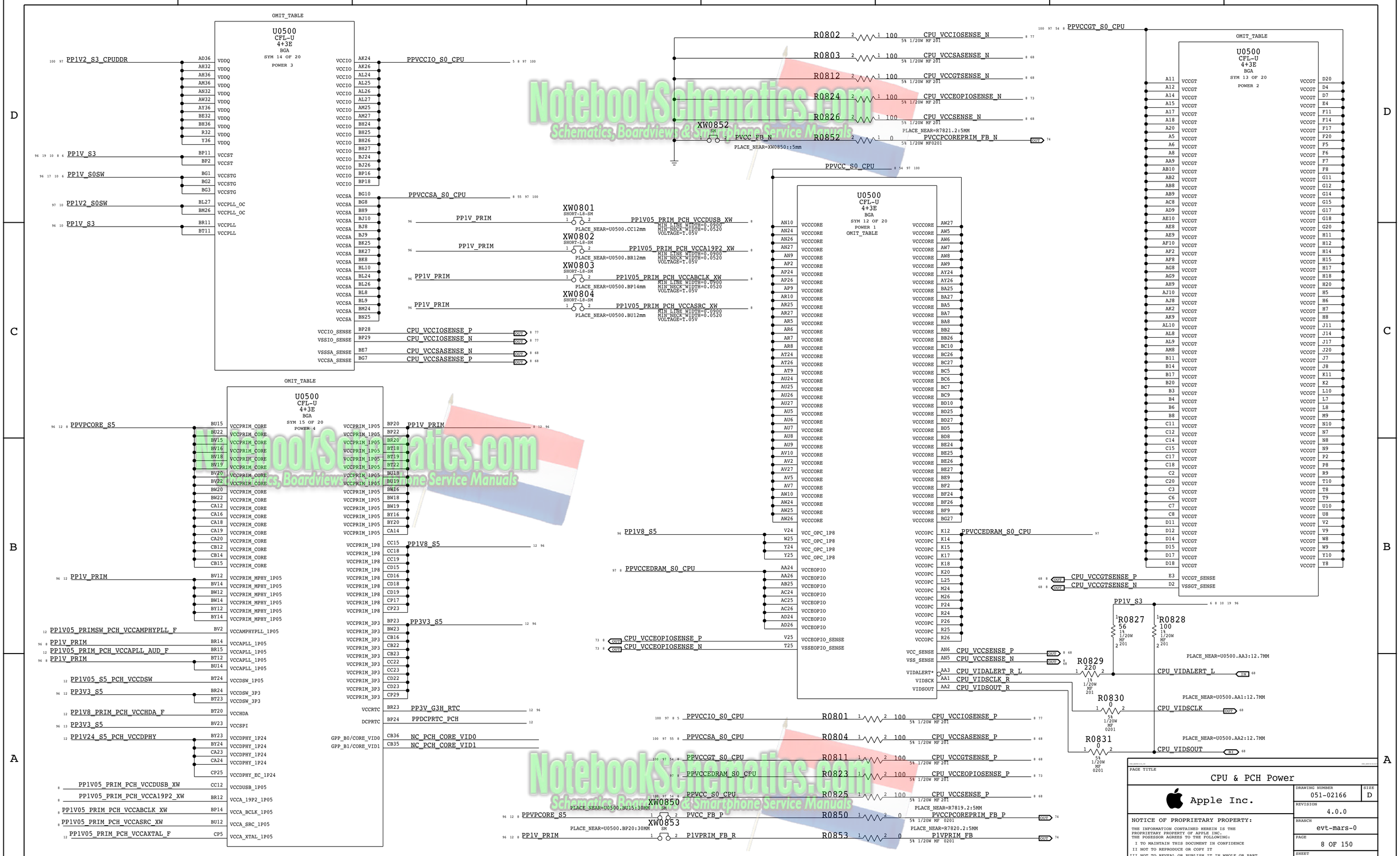
U0500
CFL-U
4+3E
BGA
SYM 14 OF 20
POWER 3
OMIT_TABLE
PP1V2_S3_CPUDDR
PP1V_S3
PP1V_S0SW
PP1V2_S0SW
PPVCCIO_S0_CPU
PPVCCSA_S0_CPU
PP1V_PRIM
XW0801
XW0802
XW0803
XW0804
PP1V05_PRIM_PCH_VCCDUSB_XW
PP1V05_PRIM_PCH_VCCA19P2_XW
PP1V05_PRIM_PCH_VCCABCLK_XW
PP1V05_PRIM_PCH_VCCASRC_XW
CPU_VCCIOSENSE_P
CPU_VCCIOSENSE_N
CPU_VCCSASENSE_N
CPU_VCCSASENSE_P
U0500
CFL-U
4+3E
BGA
SYM 15 OF 20
POWER 4
PPVPCORE_S5
PP1V_PRIM
PP1V8_S5
PP3V3_S5
PP3V_G3H_RTC
PPDCPRTC_PCH
NC_PCH_CORE_VID0
NC_PCH_CORE_VID1
PP1V05_PRIMSW_PCH_VCCAMPHYPLL_F
PP1V05_PRIM_PCH_VCCAPLL_AUD_F
PP1V05_S5_PCH_VCCDSW
PP1V8_PRIM_PCH_VCCHDA_F
PP1V24_S5_PCH_VCCDPHY
PP1V05_PRIM_PCH_VCCDUSB_XW
PP1V05_PRIM_PCH_VCCA19P2_XW
PP1V05_PRIM_PCH_VCCABCLK_XW
PP1V05_PRIM_PCH_VCCASRC_XW
PP1V05_PRIM_PCH_VCCAXTAL_F
R0802
R0803
R0812
R0824
R0826
R0852
CPU_VCCIOSENSE_N
CPU_VCCSASENSE_N
CPU_VCCGTSENSE_N
CPU_VCCEOPIOSENSE_N
CPU_VCCSENSE_N
PVCCPCOREPRIM_FB_N
XW0852
PVCC_FB_N
PLACE_NEAR=XW0850::5mm
PPVCCGT_S0_CPU
PPVCC_S0_CPU
U0500
CFL-U
4+3E
BGA
SYM 12 OF 20
POWER 1
OMIT_TABLE
U0500
CFL-U
4+3E
BGA
SYM 13 OF 20
POWER 2
OMIT_TABLE
PPVCCEDRAM_S0_CPU
PP1V8_S5
PPVCCEDRAM_S0_CPU
CPU_VCCEOPIOSENSE_P
CPU_VCCEOPIOSENSE_N
CPU_VCCGTSENSE_P
CPU_VCCGTSENSE_N
PP1V_S3
R0827
R0828
CPU_VCCSENSE_P
CPU_VCCSENSE_N
R0829
CPU_VIDALERT_R_L
CPU_VIDALERT_L
CPU_VIDSCLK_R
CPU_VIDSOUT_R
R0830
CPU_VIDSCLK
R0831
CPU_VIDSOUT
PPVCCIO_S0_CPU
R0801
CPU_VCCIOSENSE_P
PPVCCSA_S0_CPU
R0804
CPU_VCCSASENSE_P
PPVCCGT_S0_CPU
R0811
CPU_VCCGTSENSE_P
PPVCCEDRAM_S0_CPU
R0823
CPU_VCCEOPIOSENSE_P
PPVCC_S0_CPU
R0825
CPU_VCCSENSE_P
XW0850
PPVPCORE_S5
PVCC_FB_P
R0850
PVCCPCOREPRIM_FB_P
XW0853
PP1V_PRIM
P1VPRIM_FB_R
R0853
P1VPRIM_FB
BOM_COST_GROUP=CPU & CHIPSET
PAGE TITLE
CPU & PCH Power
Apple Inc.
DRAWING NUMBER
051-02166
SIZE
D
REVISION
4.0.0
BRANCH
evt-mars-0
PAGE
8 OF 150
SHEET
8 OF 108
NOTICE OF PROPRIETARY PROPERTY:
THE INFORMATION CONTAINED HEREIN IS THE PROPRIETARY PROPERTY OF APPLE INC.
THE POSESSOR AGREES TO THE FOLLOWING:
I TO MAINTAIN THIS DOCUMENT IN CONFIDENCE
II NOT TO REPRODUCE OR COPY IT
III NOT TO REVEAL OR PUBLISH IT IN WHOLE OR PART
IV ALL RIGHTS RESERVED

OMIT_TABLE

U0500
CFL-U
4+3E
BGA
SYM 16 OF 20
GND1

A3	VSS	VSS	AP36
A4	VSS	VSS	AR4
A32	VSS	VSS	AR28
A36	VSS	VSS	AT4
AB3	VSS	VSS	AT33
AB4	VSS	VSS	AT35
AB7	VSS	VSS	AT36
AB27	VSS	VSS	AU4
AB30	VSS	VSS	AU10
AB33	VSS	VSS	AU28
AB36	VSS	VSS	AU29
AC5	VSS	VSS	AU32
AC10	VSS	VSS	AV3
AC27	VSS	VSS	AV4
AC30	VSS	VSS	AV6
AD33	VSS	VSS	AV8
AD35	VSS	VSS	AV25
AE7	VSS	VSS	AV28
AE24	VSS	VSS	AV33
AE25	VSS	VSS	AV36
AE26	VSS	VSS	AW1
AE27	VSS	VSS	AW3
AE30	VSS	VSS	AW4
AF3	VSS	VSS	AW28
AF4	VSS	VSS	AW29
AF7	VSS	VSS	AW30
AF25	VSS	VSS	AW31
AF27	VSS	VSS	AY4
AF30	VSS	VSS	AY33
AF33	VSS	VSS	AY35
AF36	VSS	VSS	B2
AG5	VSS	VSS	B5
AG10	VSS	VSS	B7
AG24	VSS	VSS	B9
AG26	VSS	VSS	B12
AH24	VSS	VSS	B15
AH25	VSS	VSS	B18
AH27	VSS	VSS	B21
AH28	VSS	VSS	B23
AH29	VSS	VSS	B25
AH30	VSS	VSS	B27
AH31	VSS	VSS	B29
AH33	VSS	VSS	B31
AH35	VSS	VSS	B34
AJ7	VSS	VSS	B36
AJ25	VSS	VSS	B37
AJ28	VSS	VSS	BA3
AK3	VSS	VSS	BA4
AK4	VSS	VSS	BA6
AK33	VSS	VSS	BA10
AK36	VSS	VSS	BA28
AL7	VSS	VSS	BB3
AL28	VSS	VSS	BB4
AL29	VSS	VSS	BB33
AL32	VSS	VSS	BB36
AM5	VSS	VSS	BC4
AM10	VSS	VSS	BC8
AM28	VSS	VSS	BC25
AM33	VSS	VSS	BC29
AM35	VSS	VSS	BC32
AN7	VSS	VSS	BD4
AN8	VSS	VSS	BD6
AN25	VSS	VSS	BD7
AN28	VSS	VSS	BD28
AN29	VSS	VSS	BD33
AN30	VSS	VSS	BD35
AN31	VSS	VSS	BD36
AP3	VSS	VSS	BE3
AP4	VSS	VSS	BE4
AP33	VSS	VSS	BE8

OMIT_TABLE

U0500
CFL-U
4+3E
BGA
SYM 17 OF 20
GND2

BE10	VSS	VSS	BV3
BE28	VSS	VSS	BV4
BE29	VSS	VSS	BV11
BE30	VSS	VSS	BV31
BE31	VSS	VSS	BV33
BF3	VSS	VSS	BW7
BF4	VSS	VSS	BW11
BF33	VSS	VSS	BW15
BF36	VSS	VSS	BW24
BG4	VSS	VSS	BY5
BG25	VSS	VSS	BY11
BG28	VSS	VSS	BY15
BH28	VSS	VSS	BY18
BH29	VSS	VSS	BY19
BH32	VSS	VSS	BY22
BH33	VSS	VSS	BY25
BH35	VSS	VSS	BY28
BJ7	VSS	VSS	BY33
BK2	VSS	VSS	BY35
BK3	VSS	VSS	BY36
BK4	VSS	VSS	C1
BK7	VSS	VSS	C4
BK10	VSS	VSS	C9
BK28	VSS	VSS	C21
BK33	VSS	VSS	C25
BL7	VSS	VSS	C29
BL25	VSS	VSS	C33
BL28	VSS	VSS	C34
BL29	VSS	VSS	C36
BL30	VSS	VSS	C37
BL31	VSS	VSS	CA11
BL32	VSS	VSS	CA15
BM9	VSS	VSS	CA22
BM33	VSS	VSS	CA25
BM35	VSS	VSS	CB2
BM36	VSS	VSS	CB3
BN7	VSS	VSS	CB4
BN30	VSS	VSS	CB7
BP3	VSS	VSS	CB11
BP4	VSS	VSS	CB18
BP7	VSS	VSS	CB19
BP12	VSS	VSS	CB20
BP15	VSS	VSS	CB24
BP19	VSS	VSS	CB25
BP25	VSS	VSS	CB33
BP32	VSS	VSS	CC7
BP33	VSS	VSS	CC11
		VSS	CC14
BR16	VSS	VSS	CC16
BR19	VSS	VSS	CC20
BR22	VSS	VSS	CC24
BR25	VSS	VSS	CC25
BT5	VSS	VSS	CC28
BT14	VSS	VSS	CC31
BT15	VSS	VSS	CD11
BT16	VSS	VSS	CD12
BT25	VSS	VSS	CD14
BT28	VSS	VSS	CD20
BT33	VSS	VSS	CD24
BT35	VSS	VSS	CD25
BT36	VSS	VSS	CE7
BU7	VSS	VSS	CE33
BU11	VSS	VSS	CE35
BU16	VSS	VSS	CE36
BU20	VSS	VSS	CF2
BU23	VSS	VSS	CF3
BU24	VSS	VSS	CF4
BU25	VSS	VSS	CF11
		VSS	CF14

OMIT_TABLE

U0500
CFL-U
4+3E
BGA
SYM 18 OF 20
GND 3

CF19	VSS	VSS	G27
CF23	VSS	VSS	G33
CF28	VSS	VSS	G35
CG7	VSS	VSS	G36
CG33	VSS	VSS	H9
CH31	VSS	VSS	H21
CJ2	VSS	VSS	H27
CJ3	VSS	VSS	J5
CJ4	VSS	VSS	J6
CJ11	VSS	VSS	J12
CJ14	VSS	VSS	J15
CJ19	VSS	VSS	J18
CJ23	VSS	VSS	J21
CJ28	VSS	VSS	J24
CJ33	VSS	VSS	J33
CJ35	VSS	VSS	J36
CJ36	VSS	VSS	K3
CK1	VSS	VSS	K4
CK4	VSS	VSS	K9
CK7	VSS	VSS	K21
CK37	VSS	VSS	K22
CL2	VSS	VSS	K24
CM1	VSS	VSS	K25
CM4	VSS	VSS	K27
CM5	VSS	VSS	K28
CM9	VSS	VSS	K29
CM13	VSS	VSS	K30
CM17	VSS	VSS	K31
CM21	VSS	VSS	K32
CM25	VSS	VSS	L6
CM29	VSS	VSS	L27
CM31	VSS	VSS	L33
CM33	VSS	VSS	L35
CM37	VSS	VSS	L36
CN1	VSS	VSS	N6
CN2	VSS	VSS	N25
CN5	VSS	VSS	N27
CN9	VSS	VSS	P3
CN13	VSS	VSS	P4
CN17	VSS	VSS	P7
CN21	VSS	VSS	P10
CN25	VSS	VSS	P33
CN29	VSS	VSS	P36
CN37	VSS	VSS	R27
CP1	VSS	VSS	R28
CP2	VSS	VSS	R29
CP9	VSS	VSS	R30
CP11	VSS	VSS	R31
CP13	VSS	VSS	T7
CP15	VSS	VSS	T27
CP19	VSS	VSS	T30
CP21	VSS	VSS	T33
CP27	VSS	VSS	T35
CP35	VSS	VSS	T36
CP37	VSS	VSS	U7
CR2	VSS	VSS	U24
CR6	VSS	VSS	U26
CR34	VSS	VSS	V3
CR36	VSS	VSS	V4
D1	VSS	VSS	V26
D5	VSS	VSS	V27
D6	VSS	VSS	V30
D8	VSS	VSS	V33
D9	VSS	VSS	V36
D21	VSS	VSS	W7
D25	VSS	VSS	W10
E9	VSS	VSS	W27
E23	VSS	VSS	W30
E27	VSS	VSS	Y7
E29	VSS	VSS	Y26
E31	VSS	VSS	Y27
E33	VSS	VSS	Y30
E35	VSS	VSS	Y33
F2	VSS	VSS	Y35
F3	VSS		
F4	VSS		
F12	VSS		
F15	VSS		
F18	VSS		
F21	VSS		
F24	VSS		
F33	VSS		
G3	VSS		
G4	VSS		
G9	VSS		
G21	VSS		

BOM_COST_GROUP=CPU & CHIPSET

SYNC_MASTER=J132_GAREN SYNC_DATE=02/03/2015

PAGE TITLE

CPU & PCH Grounds

Apple Inc.

DRAWING NUMBER	051-02166
SIZE	D
REVISION	4.0.0
BRANCH	evt-mars-0
PAGE	9 OF 150
SHEET	9 OF 108

NOTICE OF PROPRIETARY PROPERTY:
THE INFORMATION CONTAINED HEREIN IS THE PROPRIETARY PROPERTY OF APPLE INC.
THE POSESSOR AGREES TO THE FOLLOWING:
I TO MAINTAIN THIS DOCUMENT IN CONFIDENCE
II NOT TO REPRODUCE OR COPY IT
III NOT TO REVEAL OR PUBLISH IT IN WHOLE OR PART
IV ALL RIGHTS RESERVED

NotebookSchematics.com
Schematics, Boardviews & Smartphone Service Manuals

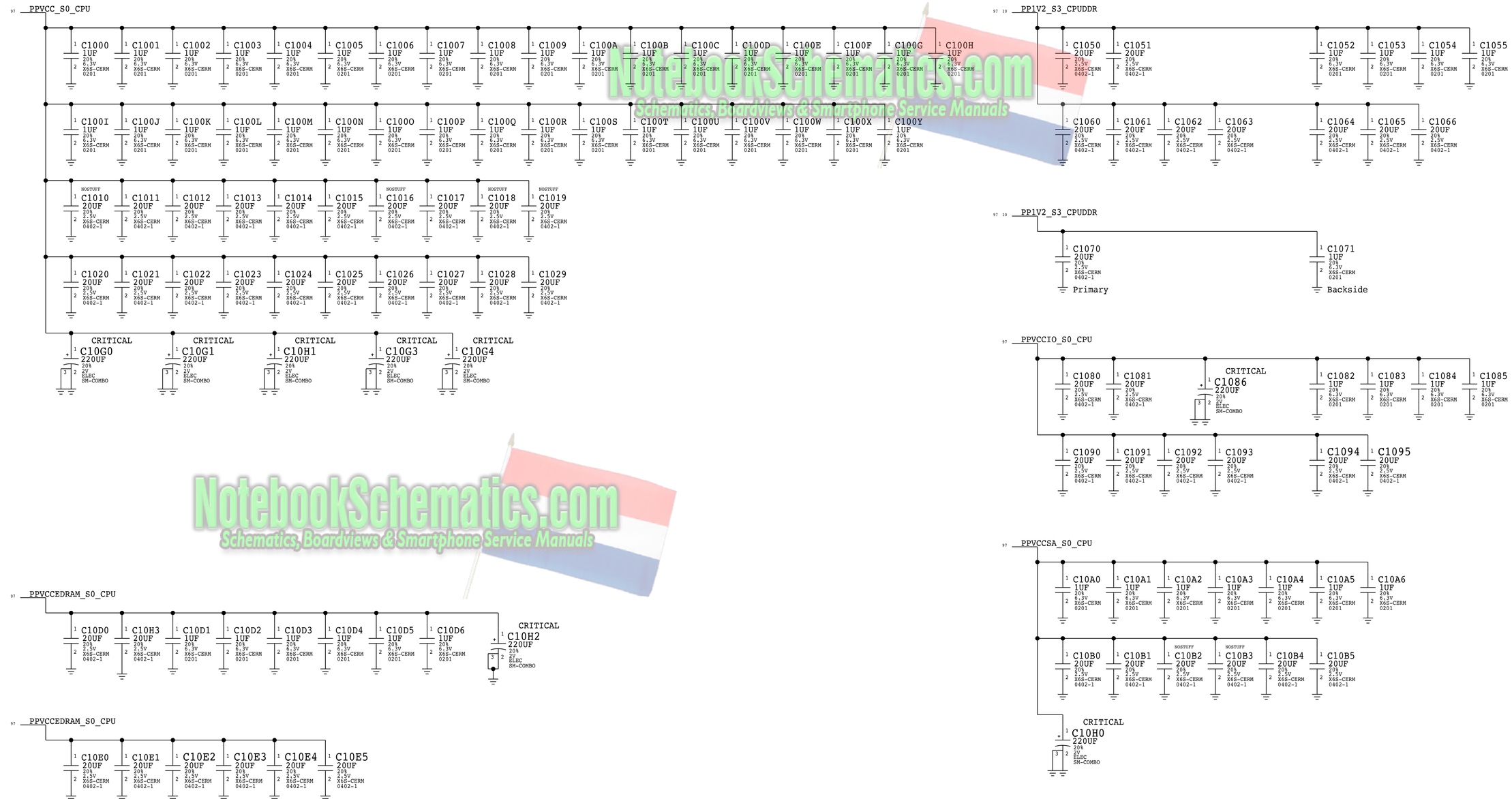

BOM_COST_GROUP=CPU & CHIPSET

PAGE TITLE	CPU Core Decoupling
Apple Inc.	DRAWING NUMBER 051-02166 SIZE D
	REVISION 4.0.0
	BRANCH evt-mars-0
	PAGE 10 OF 150
	SHEET 10 OF 108

NOTICE OF PROPRIETARY PROPERTY:
THE INFORMATION CONTAINED HEREIN IS THE PROPRIETARY PROPERTY OF APPLE INC.
THE POSESSOR AGREES TO THE FOLLOWING:
I TO MAINTAIN THIS DOCUMENT IN CONFIDENCE
II NOT TO REPRODUCE OR COPY IT
III NOT TO REVEAL OR PUBLISH IT IN WHOLE OR PART
IV ALL RIGHTS RESERVED

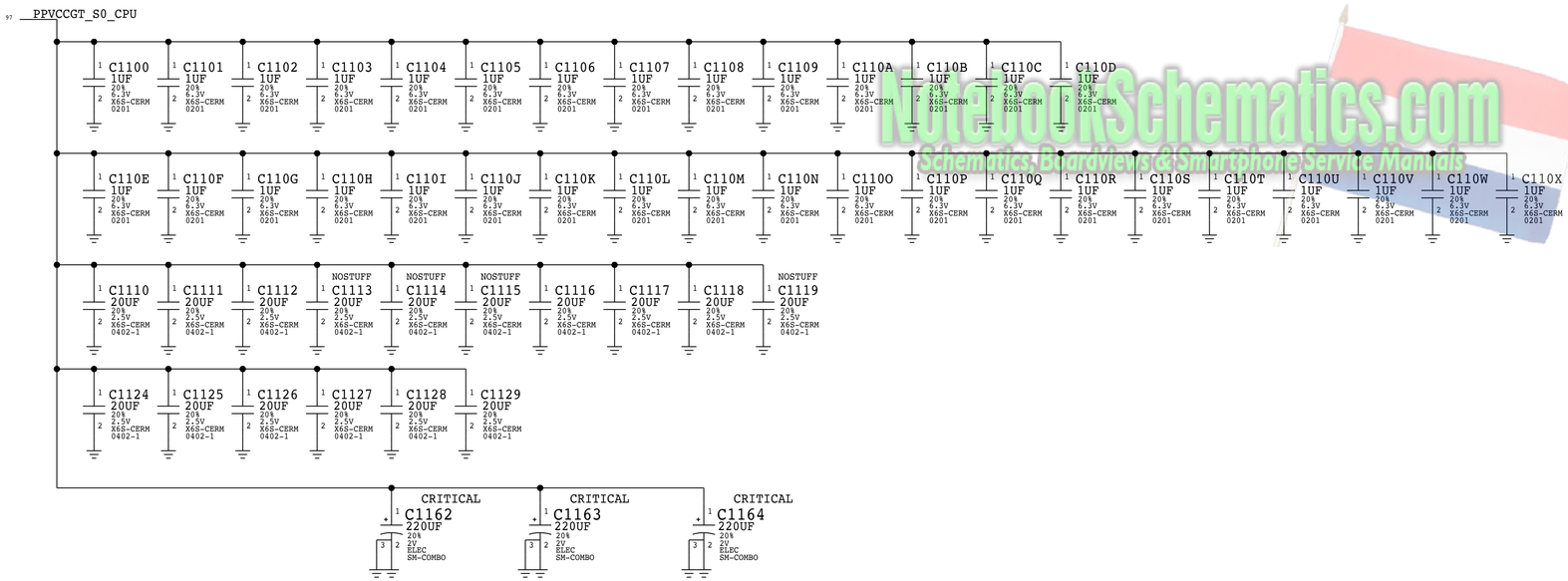

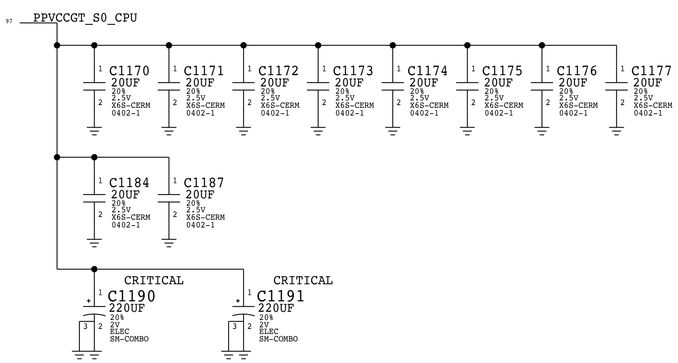

NotebookSchematics.com
Schematics,Boardviews & Smartphone Service Manuals

BOM_COST_GROUP=CPU & CHIPSET

SYNC_MASTER=T290_CPU SYNC_DATE=07/19/2016

PAGE TITLE
CPU GT Decoupling

Apple Inc.

DRAWING NUMBER 051-02166 SIZE D
REVISION 4.0.0
BRANCH evt-mars-0
PAGE 11 OF 150
SHEET 11 OF 108

NOTICE OF PROPRIETARY PROPERTY:
THE INFORMATION CONTAINED HEREIN IS THE PROPRIETARY PROPERTY OF APPLE INC.
THE POSESSOR AGREES TO THE FOLLOWING:
I TO MAINTAIN THIS DOCUMENT IN CONFIDENCE
II NOT TO REPRODUCE OR COPY IT
III NOT TO REVEAL OR PUBLISH IT IN WHOLE OR PART
IV ALL RIGHTS RESERVED

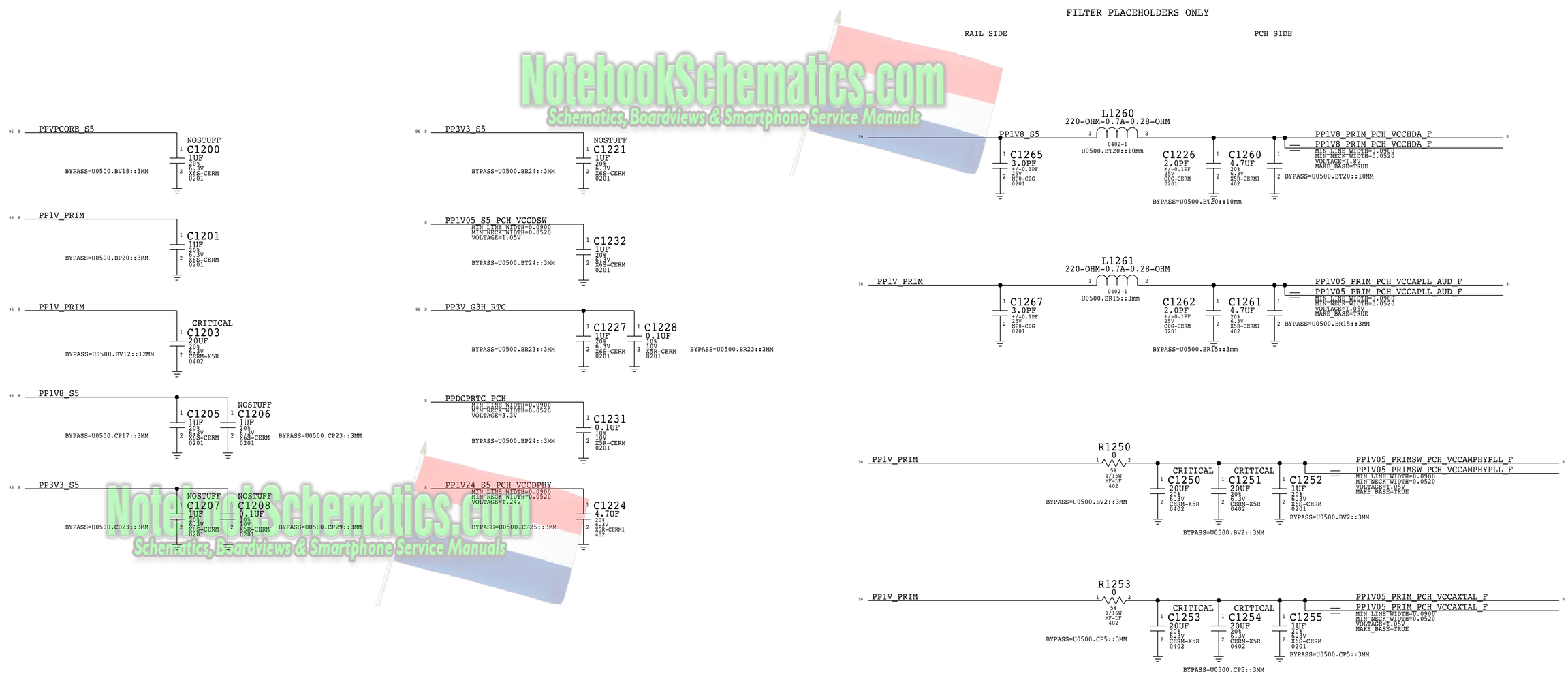

BOM_COST_GROUP=CPU & CHIPSET

PAGE TITLE	PCH Decoupling
Apple Inc.	DRAWING NUMBER 051-02166 / SIZE D
	REVISION 4.0.0
	BRANCH evt-mars-0
	PAGE 12 OF 150
	SHEET 12 OF 108

NOTICE OF PROPRIETARY PROPERTY:
THE INFORMATION CONTAINED HEREIN IS THE PROPRIETARY PROPERTY OF APPLE INC.
THE POSESSOR AGREES TO THE FOLLOWING:
I TO MAINTAIN THIS DOCUMENT IN CONFIDENCE
II NOT TO REPRODUCE OR COPY IT
III NOT TO REVEAL OR PUBLISH IT IN WHOLE OR PART
IV ALL RIGHTS RESERVED

OMIT_TABLE

U0500
CFL-U
4+3E
BGA
SYM 7 OF 20

ALL GPP_F* PINS ARE 1.8V ONLY!

NC_PCH_I2S0_SYNC	BN34	HDA_SYNC/I2S0_SFRM	AUDIO
NC_PCH_I2S0_CLK	BN37	HDA_BCLK/I2S0_SCLK	
NC_HDA_SDOUT	BN36	HDA_SDO/I2S0_TXD	
NC_PCH_I2S0_D2R	BN35	HDA_SDI0/I2S0_RXD	
NC	BL36	HDA_SDI1/I2S1_RXD	
NC_PCH_I2S1_CLK	BL35	HDA_RST*/I2S1_SCLK	
NC_PCH_GPP_D17	CK25	GPP_D17/DMIC_CLK1	
NC	BL37	I2S1_SFRM	
NC	BL34	I2S1_TXD	
JTAG_TBT_X_TMS	CC8	GPP_E18/DPPB_CTRLCLK	(STRAP)
PCH_DDPB_CTRLDATA	CC9	GPP_E19/DPPB_CTRLDATA	
JTAG_TBT_T_TMS	CH4	GPP_E20/DPPC_CTRLCLK	
PCH_DDPC_CTRLDATA	CH3	GPP_E21/DPPC_CTRLDATA	(STRAP)
MLB_RAMCFG0	CM24	GPP_D13/ISH_UART0_RXD/SMLUBDATA/I2C4B_SDA	
MLB_RAMCFG1	CN23	GPP_D14/ISH_UART0_TXD/SMLUBCLK/I2C4B_SCL	
NC_PCH_GPP_D11	CM22	GPP_D11	(BSSB_CLK)
PCH_STRP_JTAGODTDIS	CP22	GPP_D12	(BSSB_DATA_IN)
NC_PCH_STRP_TOPBLK_SWP_L	CF35	GPP_B14/SPKR	(STRAP)

CP18	NC_PCH_GPP_F18	GPP_F18/EMMC_DATA6	SDIO/SDXC
CM18	NC_PCH_GPP_F19	GPP_F19/EMMC_DATA7	
CM16	NC_PCH_GPP_F20	GPP_F20/EMMC_RCLK	
CP16	NC_PCH_GPP_F21	GPP_F21/EMMC_CLK	
CN16	NC_PCH_GPP_F22	GPP_F22/EMMC_RESET*	
CF17	NC_PCH_GPP_F23	GPP_F23	
CH36	TBT_X_CIO_PWR_EN (OUT 13 26 28 29 30)	GPP_G0/SD_CMD	
CL35	TBT_X_USB_PWR_EN (OUT 13 26 28 29 30)	GPP_G1/SD3_DATA0	
BW36	NC_PCH_GPP_A17	GPP_A17/SD_VDD1_PWR_EN*/ISH_GP7	
BY31	NC_PCH_GPP_A16	GPP_A16/SD_1P8_SEL*	
CK33	SD_RCOMP	SD_1P8_RCOMP	
CM34		SD_3P3_RCOMP	
CR18	NC_PCH_GPP_F17	GPP_F17/EMMC_DATA5	(1.8V)

R1370 200 1% 1/20W MF 201 — PLACE_NEAR=U0500.CK33:12.7MM

GPP_F0/CNV_PA_BLANKING		GPP_H12/M2_SKT2/CFG[0]	CR28 JTAG_ISP_TCK (OUT 13 26 88)
GPP_F1		GPP_H13/M2_SKT2/CFG[1]	CP28 JTAG_ISP_TDI (OUT 13 26 88)
GPP_F2		GPP_H14/M2_SKT2/CFG[2]	CN28 JTAG_ISP_TDO (IN 13 26 88)
GPP_F3		GPP_H15/M2_SKT2/CFG[3]	CM28 TBT_POC_RESET (OUT 13 28 90)
GPP_H4/I2C2_SDA		GPP_H16/DDPF_CTRLCLK	CR26 NC_PCH_GPP_H16
GPP_H5/I2C2_SCL		GPP_H17/DDPF_CTRLDATA	CP26 NC_PCH_DDPF_CTRLDATA
GPP_H6/I2C3_SDA		GPP_H18/CPU_C10_GATE*	CN27 CPU_C10_GATE_L (OUT 13 75 77 78)
GPP_H7/I2C3_SCL		GPP_H19/TIMESYNC[0]	CM27 WLAN_AUDIO_SYNC (IN 13 35 37)
GPP_H8/I2C4_SDA		GPP_H20/IMGCLKOUT[1]	CH25 NC_PCH_GPP_H20
GPP_H9/I2C4_SCL		GPP_H21	CF25 PCH_STRP_XTAL_24MHZ (13)
GPP_H10/I2C5_SDA/ISH_I2C2_SDA		GPP_H22	CN26 NC_PCH_GPP_H22
GPP_H11/I2C5_SCL/ISH_I2C2_SCL		GPP_H23	CM26 PCH_STRP_SPIROM_SAF (13)

OMIT_TABLE

U0500
CFL-U
4+3E
BGA
SYM 5 OF 20

SPI0_CLK	CH37		SPI-FLASH
SPI0_MISO	CF37		
SPI0_MOSI	CF36		
SPI0_IO2	CF34		
SPI0_IO3	CG34		
SPI0_CS0*	CG36		
SPI0_CS1*	CG35		
SPI0_CS2*	CH34		
GPP_C20/UART2_RXD			SPI-TOUCH
GPP_C21/UART2_TXD			
GPP_C22/UART2_RTS*			
GPP_C23/UART2_CTS*			
GPP_D15/ISH_UART0_RTS*			
GPP_D16/ISH_UART0_CTS*			
GPP_D21/SPI1_IO2			
CL_CLK	CH7		C LINK
CL_DATA	CH8		
CL_RST*	CH9		
GPP_A0/RCIN*	BV29		
GPP_A6/SERIRQ	BV28		

GPP_C0/SMBCLK	CK14	SMBUS_PCH_CLK (OUT 50)	SMBUS,SMLINK
GPP_C1/SMBDATA	CH15	SMBUS_PCH_DATA (BI 50)	
GPP_C2/SMBALERT*	CJ15	NC_PCH_STRP_TLSCONF	(STRAP)
GPP_C3/SML0CLK	CH14	SML_PCH_0_CLK (OUT 50)	
GPP_C4/SML0DATA	CF15	SML_PCH_0_DATA (BI 50)	
GPP_C5/SML0ALERT*	CG15	PCH_STRP_ESPI (13)	(STRAP)
GPP_C6/SML1CLK	CN15	I2C_SNS1_S0_SCL (OUT 50)	
GPP_C7/SML1DATA	CM15	I2C_SNS1_S0_SDA (BI 50)	
GPP_B23/SML1ALERT*/PCHHOT*	CC34	NC_PCH_STRP_BSSB_SEL_GPIO	(STRAP)
GPP_A1/LAD0/ESPI_IO0	CA29	ESPI_IO_PCH<0> — R1320 20 1% 1/20W MF 201 — ESPI_IO<0> (BI 19 38)	LPC
GPP_A2/LAD1/ESPI_IO1	BY29	ESPI_IO_PCH<1> — R1321 20 1% 1/20W MF 201 — ESPI_IO<1> (BI 19 38)	
GPP_A3/LAD2/ESPI_IO2	BY27	ESPI_IO_PCH<2> — R1322 20 1% 1/20W MF 201 — ESPI_IO<2> (BI 19 38)	
GPP_A4/LAD3/ESPI_IO3	BV27	ESPI_IO_PCH<3> — R1323 20 1% 1/20W MF 201 — ESPI_IO<3> (BI 19 38)	
GPP_A5/LFRAME*/ESPI_CS*	CA28	ESPI_CS_L (OUT 19 38)	
GPP_A14/SUS_STAT*/ESPI_RESET*	CA27	ESPI_RESET_L (OUT 19 38)	
GPP_A9/CLKOUT_LPC0/ESPI_CLK	BV32	ESPI_CLK60M_R — R1327 22 1% 1/20W MF 201 — ESPI_CLK60M (OUT 19 38)	
GPP_A10/CLKOUT_LPC1	BV30	NC_PCH_GPP_A10	
GPP_A8/CLKRUN*	BV30	NC_PCH_GPP_A8	

TP_SPI_PCHROM_CLK	CH37	
NC_SPI_PCHROM_MISO	CF37	
SPI_PCHROM_MOSI (13)	CF36	
SPI_PCHROM_IO<2> (17 13)	CF34	
SPI_PCHROM_IO<3> (13)	CG34	
TP_SPI_PCHROM_CS_L	CG36	
NC_SPI_CS1_L	CG35	
NC_SPI_CS2_L	CH34	
PCH_UART_DEBUG_D2R (103 100 28 13 IN)	CR12	
PCH_UART_DEBUG_R2D (103 100 28 13 OUT)	CP12	
NC_PCH_GPP_C22	CN12	
PCH_UART2_CTS_L (13)	CM12	
MLB_RAMCFG2 (13)	CM23	
MLB_RAMCFG3 (13)	CR24	
MLB_RAMCFG4 (13)	CG23	
PCH_GPP_A0_PU (13)	BV29	
NC_PCH_GPP_A6	BV28	

PP3V3_S5 (8 96)

R1366	100K	5%	1/20W	MF	201	SPI_PCHROM_MOSI (13)
R1367	100K	5%	1/20W	MF	201	SPI_PCHROM_IO<2> (13 17)
R1368	100K	5%	1/20W	MF	201	SPI_PCHROM_IO<3> (13)

PP1V8_S5 (14 15 16 38 96)

R1344	100K	5%	1/20W	MF	201	PCH_GPP_A0_PU (13)
R1345	1K	5%	1/20W	MF	201	PCH_STRP_ESPI (13)
R1352	47K	5%	1/20W	MF	201	PCH_UART_DEBUG_D2R (13 28 100 103)
R1353	47K	5%	1/20W	MF	201	PCH_UART_DEBUG_R2D (13 28 100 103)
R1363	1K	5%	1/20W	MF	201	PCH_STRP_SPIROM_SAF (13)
R1365	1K	5%	1/20W	MF	201	PCH_STRP_XTAL_24MHZ (13)

PP3V3_S5 (5 14 15 19 96)

R1346	100K	5%	1/20W	MF	201	PCH_STRP_JTAGODTDIS (13)
R1355	10K	5%	1/20W	MF	201	JTAG_TBT_X_TMS (13 26)
R1356	10K	5%	1/20W	MF	201	JTAG_TBT_T_TMS (13 88)
R1359	10K	5%	1/20W	MF	201	JTAG_ISP_TDO (13 26 88)
R1347	100K	5%	1/20W	MF	201	CPU_C10_GATE_L (13 75 77 78)

Need to Revew move or remove

PP3V3_TBT_X_S0 (97)

R1357	100K	5%	1/20W	MF	201	NOSTUFF	TBT_X_CIO_PWR_EN (13 26 28 29 30)
R1358	100K	5%	1/20W	MF	201	NOSTUFF	TBT_X_USB_PWR_EN (13 26 28 29 30)

PM_SLP_S3_L (14 16 26 88 100 103)

R1371	100K	5%	1/20W	MF	201	TBT_X_CIO_PWR_EN (13 26 28 29 30)
R1372	100K	5%	1/20W	MF	201	TBT_X_USB_PWR_EN (13 26 28 29 30)

R1360	100K	5%	1/20W	MF	201	JTAG_ISP_TCK (13 26 88)
R1361	100K	5%	1/20W	MF	201	JTAG_ISP_TDI (13 26 88)
R1354	47K	5%	1/20W	MF	201	PCH_UART2_CTS_L (13)
R1362	100K	5%	1/20W	MF	201	TBT_POC_RESET (13 28 90)
R1364	100K	5%	1/20W	MF	201	WLAN_AUDIO_SYNC (13 35 37)

MEMORY CONFIGURATION STRAPS.

PCH INTERNAL PULL-UPS ARE TO 1.8V.

(13) MLB_RAMCFG0	RAMCFG4_L	R1334	RAMCFG3_L	R1333	RAMCFG2_L	R1332	RAMCFG1_L	R1331	RAMCFG0_L R1330
(13) MLB_RAMCFG1									
(13) MLB_RAMCFG2									
(13) MLB_RAMCFG3									
(13) MLB_RAMCFG4									

1K 5% 1/20W MF 201

BOM GROUP	BOM OPTIONS
RAMCFG_SLOT	RAMCFG4_L,RAMCFG3_L,RAMCFG2_L,RAMCFG1_L,RAMCFG0_L

BOM_COST_GROUP=CPU & CHIPSET

DESIGN: X502/MLB
LAST CHANGE: Tue Feb 2 13:18:21 2016

PAGE TITLE: PCH Audio/LPC/SPI/SMBus

Apple Inc.

DRAWING NUMBER: 051-02166 — SIZE: D
REVISION: 4.0.0
BRANCH: evt-mars-0
PAGE: 13 OF 150
SHEET: 13 OF 108

NOTICE OF PROPRIETARY PROPERTY:
THE INFORMATION CONTAINED HEREIN IS THE PROPRIETARY PROPERTY OF APPLE INC.
THE POSESSOR AGREES TO THE FOLLOWING:
I TO MAINTAIN THIS DOCUMENT IN CONFIDENCE
II NOT TO REPRODUCE OR COPY IT
III NOT TO REVEAL OR PUBLISH IT IN WHOLE OR PART
IV ALL RIGHTS RESERVED

NotebookSchematics.com
Schematics, Boardviews & Smartphone Service Manuals

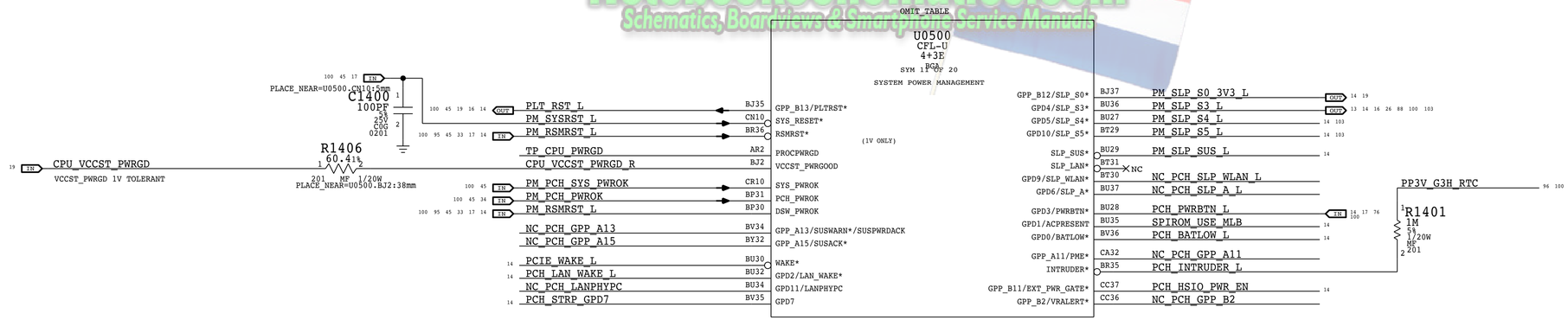

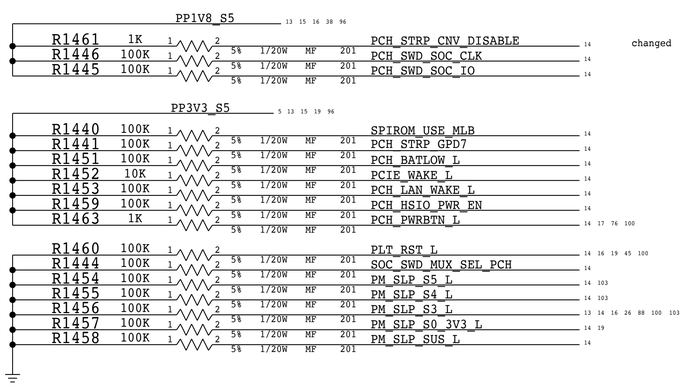

NOTE: =PM_SLP_S0_L HAS INTERNAL PULL-UP BEFORE RSMRST_L IS RELEASED.
THIS CAUSES A VOLTAGE DIVIDER WITH THE PULL-DOWN HERE.
THE SIGNAL IS DRIVEN HI AFTER RSMRST_L IS RELEASED.

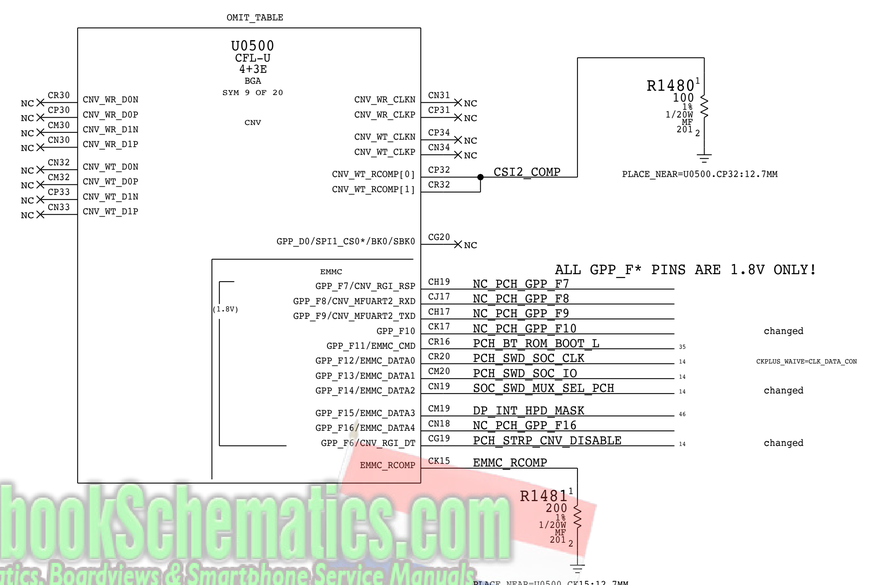

BOM_COST_GROUP=CPU & CHIPSET

DESIGN: X502/MLB
LAST CHANGE: Tue Apr 5 13:08:54 2016

PAGE TITLE
PCH Power Management

Apple Inc.

DRAWING NUMBER 051-02166 SIZE D
REVISION 4.0.0
BRANCH evt-mars-0
PAGE 14 OF 150
SHEET 14 OF 108

NOTICE OF PROPRIETARY PROPERTY:
THE INFORMATION CONTAINED HEREIN IS THE PROPRIETARY PROPERTY OF APPLE INC.
THE POSESSOR AGREES TO THE FOLLOWING:
I TO MAINTAIN THIS DOCUMENT IN CONFIDENCE
II NOT TO REPRODUCE OR COPY IT
III NOT TO REVEAL OR PUBLISH IT IN WHOLE OR PART
IV ALL RIGHTS RESERVED

NotebookSchematics.com
Schematics, Boardviews & Smartphone Service Manuals

PCIe Port Assignments:

OMIT_TABLE

U0500
CFL-U
4+3E
BGA
SYM 8 OF 20

Port	Signal	Pin	Net
EXT A (SS,DCI)	USB3_EXTA_D2R_N	CB5	PCIE1_RXN/USB31_1_RXN
	USB3_EXTA_D2R_P	CB6	PCIE1_RXP/USB31_1_RXP
	USB3_EXTA_R2D_C_N	CA4	PCIE1_TXN/USB31_1_TXN
	USB3_EXTA_R2D_C_P	CA3	PCIE1_TXP/USB31_1_TXP
Fixture USB-A	TP_USB3_EXTC_D2R_N	BY8	PCIE2_RXN/USB31_2_RXN
	TP_USB3_EXTC_D2R_P	BY9	PCIE2_RXP/USB31_2_RXP
	TP_USB3_EXTC_R2D_C_N	CA2	PCIE2_TXN/USB31_2_TXN
	TP_USB3_EXTC_R2D_C_P	CA1	PCIE2_TXP/USB31_2_TXP
AirPort	PCH_PCIE_WLAN_D2R_N	BY7	PCIE3_RXN/USB31_3_RXN
	PCH_PCIE_WLAN_D2R_P	BY6	PCIE3_RXP/USB31_3_RXP
	PCH_PCIE_WLAN_R2D_C_N	BY4	PCIE3_TXN/USB31_3_TXN
	PCH_PCIE_WLAN_R2D_C_P	BY3	PCIE3_TXP/USB31_3_TXP
EXT USB-A	USB3_EXTD_D2R_N	BW6	PCIE4_RXN/USB31_4_RXN
	USB3_EXTD_D2R_P	BW5	PCIE4_RXP/USB31_4_RXP
	USB3_EXTD_R2D_C_N	BW2	PCIE4_TXN/USB31_4_TXN
	USB3_EXTD_R2D_C_P	BW1	PCIE4_TXP/USB31_4_TXP
Thunderbolt X lane 0	PCIE_TBT_X_D2R_N<0>	BW9	PCIE5_RXN/USB31_5_RXN
	PCIE_TBT_X_D2R_P<0>	BW8	PCIE5_RXP/USB31_5_RXP
	PCIE_TBT_X_R2D_C_N<0>	BW4	PCIE5_TXN/USB31_5_TXN
	PCIE_TBT_X_R2D_C_P<0>	BW3	PCIE5_TXP/USB31_5_TXP
Thunderbolt X lane 1	PCIE_TBT_X_D2R_N<1>	BU6	PCIE6_RXN/USB31_6_RXN
	PCIE_TBT_X_D2R_P<1>	BU5	PCIE6_RXP/USB31_6_RXP
	PCIE_TBT_X_R2D_C_N<1>	BU4	PCIE6_TXN/USB31_6_TXN
	PCIE_TBT_X_R2D_C_P<1>	BU3	PCIE6_TXP/USB31_6_TXP
Thunderbolt X lane 2	PCIE_TBT_X_D2R_N<2>	BT7	PCIE7_RXN
	PCIE_TBT_X_D2R_P<2>	BT6	PCIE7_RXP
	PCIE_TBT_X_R2D_C_N<2>	BU2	PCIE7_TXN
	PCIE_TBT_X_R2D_C_P<2>	BU1	PCIE7_TXP
Thunderbolt X lane 3	PCIE_TBT_X_D2R_N<3>	BU9	PCIE8_RXN
	PCIE_TBT_X_D2R_P<3>	BU8	PCIE8_RXP
	PCIE_TBT_X_R2D_C_N<3>	BT4	PCIE8_TXN
	PCIE_TBT_X_R2D_C_P<3>	BT3	PCIE8_TXP
Thunderbolt T lane 0	PCIE_TBT_T_D2R_N<0>	BP5	PCIE9_RXN
	PCIE_TBT_T_D2R_P<0>	BP6	PCIE9_RXP
	PCIE_TBT_T_R2D_C_N<0>	BR2	PCIE9_TXN
	PCIE_TBT_T_R2D_C_P<0>	BR1	PCIE9_TXP
Thunderbolt T lane 1 ETHERNET (DEV ONLY)	PCIE_TBT_T_D2R_N<1>	BN6	PCIE10_RXN
	PCIE_TBT_T_D2R_P<1>	BN5	PCIE10_RXP
	PCIE_TBT_T_R2D_C_N<1>	BR4	PCIE10_TXN
	PCIE_TBT_T_R2D_C_P<1>	BR3	PCIE10_TXP
	PCH_PCIE_RCOMP_N	CE6	PCIE_RCOMP_N
	PCH_PCIE_RCOMP_P	CE5	PCIE_RCOMP_P
	XDP_CPU_PRDY_L	W1	PROC_PRDY*
	XDP_CPU_PREQ_L	W2	PROC_PREQ*
	NC_PCH_GPP_A7	CC32	GPP_A7/PIRQA*
Thunderbolt X lane 2	PCIE_TBT_T_D2R_N<2>	BN10	PCIE11_RXN/SATA0_RXN
	PCIE_TBT_T_D2R_P<2>	BN8	PCIE11_RXP/SATA0_RXP
	PCIE_TBT_T_R2D_C_N<2>	BN4	PCIE11_TXN/SATA0_TXN
	PCIE_TBT_T_R2D_C_P<2>	BN3	PCIE11_TXP/SATA0_TXP
Thunderbolt X lane 3	PCIE_TBT_T_D2R_N<3>	BL6	PCIE12_RXN/SATA1A_RXN
	PCIE_TBT_T_D2R_P<3>	BL5	PCIE12_RXP/SATA1A_RXP
	PCIE_TBT_T_R2D_C_N<3>	BN2	PCIE12_TXN/SATA1A_TXN
	PCIE_TBT_T_R2D_C_P<3>	BN1	PCIE12_TXP/SATA1A_TXP

Pin	Net	Port
BK6	PCIE_SOC_D2R_N<0>	SOC lane 0
BK5	PCIE_SOC_D2R_P<0>	
BM4	PCIE_SOC_R2D_C_N<0>	
BM3	PCIE_SOC_R2D_C_P<0>	
BJ6	PCIE_SOC_D2R_N<1>	SOC lane 1
BJ5	PCIE_SOC_D2R_P<1>	
BL2	PCIE_SOC_R2D_C_N<1>	
BL1	PCIE_SOC_R2D_C_P<1>	
BG5	PCIE_SOC_D2R_N<2>	SOC lane 2
BG6	PCIE_SOC_D2R_P<2>	
BL4	PCIE_SOC_R2D_C_N<2>	
BL3	PCIE_SOC_R2D_C_P<2>	
BE5	PCIE_SOC_D2R_N<3>	SOC lane 3
BE6	PCIE_SOC_D2R_P<3>	
BJ4	PCIE_SOC_R2D_C_N<3>	
BJ3	PCIE_SOC_R2D_C_P<3>	

PCIE/USB3/SATA

USB2

Pin	Net	Note
CE3	USB_EXTA_N	Not Used
CE4	USB_EXTA_P	
CE1	NC_USB_EXTBN	Not Used
CE2	NC_USB_EXTBP	
CG3	NC_USB_EXTCN	Not Used
CG4	NC_USB_EXTCP	
CD3	TP_USB_FIXT2_N	TP for Fixture
CD4	TP_USB_FIXT2_P	
CG5	NC_USB_EXTDN	Not Used
CG6	NC_USB_EXTDP	
CC1	USB2_UPC_XA_N	XA RP Debug Mux
CC2	USB2_UPC_XA_P	
CG8	USB2_UPC_TA_N	TA RP
CG9	USB2_UPC_TA_P	
CB8	USB2_UPC_XB_N	XB RP
CB9	USB2_UPC_XB_P	
CH5	USB2_UPC_TB_N	TB RP
CH6	USB2_UPC_TB_P	
CC3	TP_USB_FIXT1_N	TP for Fixture
CC4	TP_USB_FIXT1_P	
CC5	PCH_USB2_COMP	
CE8		
CC6	PCH_USB2_VBUSSENSE	
CE9	XDP_PCH_OBSFN_C1	
CP8	XDP_PCH_OBSDATA_A0	
CR8	XDP_PCH_OBSDATA_A1	
CM8	XDP_PCH_OBSDATA_A2	
CH23	NC_SDCONN_OC_L	
CK23	NC_PCH_ENET_LOW_PWR	
CJ25	NC_PCH_GPP_D18	
CP24	NC_PCH_GPP_D19	
CN24	NC_PCH_GPP_D20	
CN8	XDP_PCH_OBSDATA_D1	
CM10	XDP_PCH_OBSDATA_D2	
CP10	XDP_PCH_OBSDATA_D3	

GROUNDED PER CFL EDS.

R1503 1K 5% 1/20W MF 201 — PLACE_NEAR=U0500.CC6:12.7MM

R1501 113 1% 1/20W MF 201 — PLACE_NEAR=U0500.CC5:12.7MM

PLACE_NEAR=U0500.CE6:12.7mm

R1504 100 1% 1/20W MF 201

OMIT_TABLE

U0500
CFL-U
4+3E
BGA
SYM 10 OF 20
CLOCK SIGNALS

ANY CLKREQ CAN MAP TO ANY CLK.
ANY CLKREQ OR CLK CAN MAP TO ANY PCIE PORT.
UNUSED CLKREQS AND CLKS SHOULD BE DISABLED.
PER SKYLAKE PDG, SKYLAKE PCH EDS.

Pin	Net
AW2	PCIE_CLK100M_TBT_T_N
AY3	PCIE_CLK100M_TBT_T_P
CF32	TBT_T_CLKREQ_L
BC1	PCIE_CLK100M_SOC_N
BC2	PCIE_CLK100M_SOC_P
CE32	SOC_CLKREQ_L
BD3	PCIE_CLK100M_TBT_X_N
BC3	PCIE_CLK100M_TBT_X_P
CF30	TBT_X_CLKREQ_L
BH3	NC_PCIE_CLK100M4N
BH4	NC_PCIE_CLK100M4P
CE31	NC_ENETSD_CLKREQ_L
BA1	PCH_PCIE_CLK100M_WLAN_N
BA2	PCH_PCIE_CLK100M_WLAN_P
CE30	PCH_WLAN_CLKREQ_L
BE1	NC_PCIE_CLK100M5N
BE2	NC_PCIE_CLK100M5P
CF31	NC_DEBUG_CLKREQ5_L
AU1	NC_ITPXDP_CLK100MN
AU2	NC_ITPXDP_CLK100MP
BT32	NC_PCH_CLK32K_SUS
CK3	PCH_CLK24M_XTALIN
CK2	PCH_CLK24M_XTALOUT
CM3	PCH_CLKIN_XTAL
CJ1	PCH_DIFFCLK_BIASREF
BN31	PMU_CLK32K_PCH_1V0
BN32	NC
BR37	PCH_RTC_RESET_L
BR34	PCH_RTC_RESET_L

R1573 100K 1% 1/20W MF 201 — PMU_CLK32K_PCH

R1572 127K 1% 1/20W MF 201 — PLACE_NEAR=U0500.BN31:5MM, PLACE_NEAR=U0500.BN31:5MM

PP1V8_S5

R1533	47K	5%	1/20W	MF	201 — SOC_CLKREQ_L
R1534	47K	5%	1/20W	MF	201 — PCH_WLAN_CLKREQ_L

PP3V3_S5

R1531	47K	5%	1/20W	MF	201 — TBT_X_CLKREQ_L
R1532	47K	5%	1/20W	MF	201 — TBT_T_CLKREQ_L
R1521	0	5%	1/20W	MF	0201 — PCH_CLKIN_XTAL

PLACE_NEAR=U0500.CM3:25.4mm

R1520 60.4 1% 1/20W MF 201 — PCH_DIFFCLK_BIASREF

PLACE_NEAR=U0500.CJ1:25.4mm

BOM_COST_GROUP=CPU & CHIPSET

DESIGN: X502/MLB
LAST CHANGE: Thu Jun 18 20:05:18 2015

PAGE TITLE
PCH PCIE/USB/CLKS

Apple Inc.

DRAWING NUMBER 051-02166 SIZE D
REVISION 4.0.0
BRANCH evt-mars-0
PAGE 15 OF 150
SHEET 15 OF 108

NOTICE OF PROPRIETARY PROPERTY:
THE INFORMATION CONTAINED HEREIN IS THE PROPRIETARY PROPERTY OF APPLE INC.
THE POSESSOR AGREES TO THE FOLLOWING:
I TO MAINTAIN THIS DOCUMENT IN CONFIDENCE
II NOT TO REPRODUCE OR COPY IT
III NOT TO REVEAL OR PUBLISH IT IN WHOLE OR PART
IV ALL RIGHTS RESERVED

NotebookSchematics.com
Schematics, Boardviews & Smartphone Service Manuals

NotebookSchematics.com
Schematics, Boardviews & Smartphone Service Manuals

ALL GPP_F* PINS ARE 1.8V ONLY!
OMIT TABLE

PLT_RST_L (100 45 19 14 IN) → R1675 100K 5% 1/20W MF 201 → (38 OUT)

U0500
CFL-U
4+3E
BGA
SYM 6 OF 20

LPSS		
GPP_B15/GSPI0_CS0*		PCH_SOC_SYNC (37 16) — CC27
GPP_B16/GSPI0_CLK		SOC_PERST_L — CE28
GPP_B17/GSPI0_MISO		NC_PCH_ENETSD_RESET_L — CE27
GPP_B18/GSPI0_MOSI		PCH_STRP_NO_REBOOT (16) — CE29
	(STRAP)	
GPP_B19/GSPI1_CS0*		NC_PCH_GPP_B19 — CA31
GPP_B20/GSPI1_CLK		NC_PCH_GPP_B20 — CC29
GPP_B21/GSPI1_MISO		NC_PCH_GPP_B21 — CC30
GPP_B22/GSPI1_MOSI		NC_PCH_STRP_BOOT_SPI_L — CA30
	(STRAP)	
GPP_C8/UART0_RXD		PCH_UART_BT_D2R (34 16 IN) — CR14
GPP_C9/UART0_TXD	(1.8V)	PCH_UART_BT_R2D (34 16 OUT) — CP14
GPP_C10/UART0_RTS*	(1.8V)	PCH_UART_BT_RTS_L (34 16 OUT) — CN14
GPP_C11/UART0_CTS*		PCH_UART_BT_CTS_L (34 16 IN) — CM14
GPP_C16/I2C0_SDA		NC_PCH_GPP_C16 — CM11
GPP_C17/I2C0_SCL		NC_PCH_GPP_C17 — CN11
GPP_C18/I2C1_SDA		NC_PCH_GPP_C18 — CK12
GPP_C19/I2C1_SCL		NC_PCH_GPP_C19 — CJ12
GPP_C12/UART1_RXD/ISH_UART1_RXD		NC_PCH_GPP_C12 — CG12
GPP_C13/UART1_TXD/ISH_UART1_TXD		NC_PCH_GPP_C13 — CH12
GPP_C14/UART1_RTS*/ISH_UART1_RTS*		NC_PCH_GPP_C14 — CF12
GPP_C15/UART1_CTS*/ISH_UART1_CTS*		NC_PCH_GPP_C15 — CG14
GPP_E22/DPPD_CTRLCLK		NC_MEM_OK — CP4
GPP_E23/DPPD_CTRLDATA		NC_PCH_DDPD_CTRLDATA — CN4
GPP_H0/I2S2_SCLK/CNV_BT_I2S_SCLK		NC_PCH_I2S_BT_CLK — CH32
GPP_H1/I2S2_SFRM/CNV_BT_I2S_BCLK		NC_PCH_I2S_BT_SYNC — CJ32
GPP_H2/I2S2_TXD/CNV_BT_I2S_SDI	(1.8V)	NC_PCH_I2S_BT_R2D — CH29
GPP_H3/I2S2_RXD/CNV_BT_I2S_SDO		NC_PCH_I2S_BT_D2R — CH30
GPP_B3/CPU_GP2		PCH_WLAN_PERST_L (36 35 19 OUT) — CB34
GPP_B4/CPU_GP3		PCH_WLAN_DEV_WAKE (36 35 OUT) — CC35

ISH		
GPP_D5/ISH_I2C0_SDA		NC_PCH_GPP_D5 — CK22
GPP_D6/ISH_I2C0_SCL		NC_PCH_GPP_D6 — CH20
GPP_D7/ISH_I2C1_SDA		NC_PCH_GPP_D7 — CH22
GPP_D8/ISH_I2C1_SCL		NC_PCH_UPC_I2C_INT_L — CJ22
GPP_D1/SPI1_CLK		NC_PCH_GPP_D1 — CF20
GPP_D2/SPI1_MISO_IO1		NC_PCH_GPP_D2 — CG22
GPP_D3/SPI1_MOSI_IO0		NC_PCH_GPP_D3 — CF22
GPP_D4/IMGCLKOUT0		NC_PCH_GPP_D4 — CG25
GPP_F4/CNV_BRI_DT		NC_PCH_GPP_F4 — CJ20
GPP_F5/CNV_BRI_RSP		NC_PCH_GPP_F5 — CK20
GPP_G6/SD_CLK		TBT_X_DPMUX_SEL (28 IN) — CK36
GPP_D9		TBT_X_PLUG_EVENT_L — CN22
GPP_D10		TBT_T_PLUG_EVENT_L — CR22
GPP_G7/SD_WP		TBT_T_DPMUX_SEL (28 IN) — CK34
GPP_G2/SD3_DATA1		TBT_T_CIO_PWR_EN (16 88 90 91 92 OUT) — CL36
GPP_G3/SD3_DATA2		TBT_T_USB_PWR_EN (16 88 90 91 92 OUT) — CM35
GPP_G4/SD_DATA3		TBT_X_PCI_RESET_L (19 26 28 OUT) — CN35
GPP_G5/SD_CD*		TBT_T_PCI_RESET_L (19 88 90 OUT) — CH35
GPP_A18/ISH_GP0		NC_PCH_GPP_A18 — BW35
GPP_A19/ISH_GP1		NC_PCH_GPP_A19 — BW34
GPP_A20/ISH_GP2		NC_PCH_GPP_A20 — CA37
GPP_A21/ISH_GP3		NC_PCH_GPP_A21 — CA36
GPP_A22/ISH_GP4		NC_BTI2SMUX_SEL_PCH — CA35
GPP_A23/ISH_GP5		NC_PCH_BT_DEV_WAKE — CA34
GPP_A12/ISH_GP6/BM_BUSY*/SX_EXIT_HOLDOFF*		NC_PCH_GPP_A12 — BW37

PM_SLP_S3_L (13 14 16 26 88 100 103)
R1670 100K 5% 1/20W MF 201 — (28 IN)
R1671 100K 5% 1/20W MF 201 — (26 28 IN) (88 90 IN)

PP1V8_S5 (13 14 15 38 96)

R1662	47K	5%	1/20W	MF	201	PCH_UART_BT_D2R (16 34)
R1663	47K	5%	1/20W	MF	201	PCH_UART_BT_R2D (16 34)
R1664	47K	5%	1/20W	MF	201	PCH_UART_BT_RTS_L (16 34)
R1665	47K	5%	1/20W	MF	201	PCH_UART_BT_CTS_L (16 34)
R1656	1K	5%	1/20W	MF	201	PCH_STRP_NO_REBOOT (16)

PP3V3_TBT_T_S0 (97)

R1676	100K	5%	1/20W	MF	201	NOSTUFF	TBT_T_CIO_PWR_EN (16 88 90 91 92)
R1677	100K	5%	1/20W	MF	201	NOSTUFF	TBT_T_USB_PWR_EN (16 88 90 91 92)

PM_SLP_S3_L (13 14 16 26 88 100 103)

R1678	100K	5%	1/20W	MF	201	TBT_T_CIO_PWR_EN (16 88 90 91 92)
R1679	100K	5%	1/20W	MF	201	TBT_T_USB_PWR_EN (16 88 90 91 92)

R1674	100K	5%	1/20W	MF	201	PCH_SOC_SYNC (16 37)

BOM_COST_GROUP=CPU & CHIPSET

DESIGN: X502/MLB
LAST CHANGE: Wed Oct 28 12:50:22 2015

PAGE TITLE
PCH SPI/UART/GPIO

Apple Inc.

DRAWING NUMBER 051-02166 | SIZE D
REVISION 4.0.0
BRANCH evt-mars-0
PAGE 16 OF 150
SHEET 16 OF 108

NOTICE OF PROPRIETARY PROPERTY:
THE INFORMATION CONTAINED HEREIN IS THE PROPRIETARY PROPERTY OF APPLE INC.
THE POSESSOR AGREES TO THE FOLLOWING:
I TO MAINTAIN THIS DOCUMENT IN CONFIDENCE
II NOT TO REPRODUCE OR COPY IT
III NOT TO REVEAL OR PUBLISH IT IN WHOLE OR PART
IV ALL RIGHTS RESERVED

Primary / Merged (CPU/PCH) Micro2-XDP

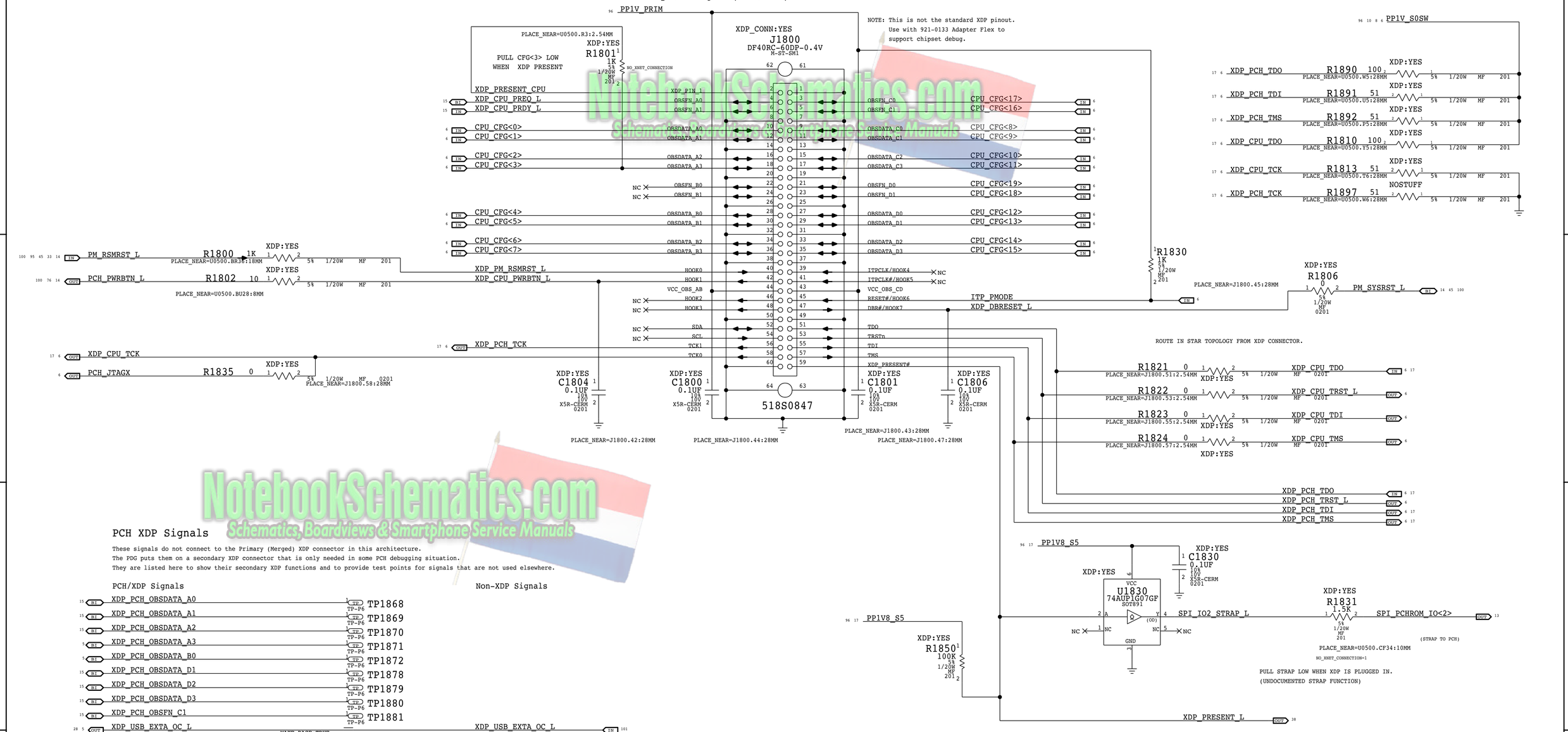

PCH XDP Signals

These signals do not connect to the Primary (Merged) XDP connector in this architecture.
The PDG puts them on a secondary XDP connector that is only needed in some PCH debugging situation.
They are listed here to show their secondary XDP functions and to provide test points for signals that are not used elsewhere.

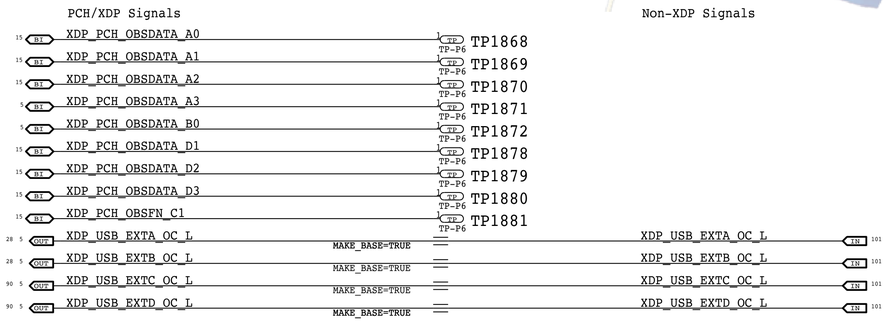

Unused GPIOs have TPs.

USB Overcurrents are aliased, do not cause USB OC# events during PCH debug.

JTAG_ISP (non-TMS) nets are aliased, do not attempt bit-banged JTAG during PCH debug.

BOM_COST_GROUP=DEBUG

PAGE TITLE	CPU/PCH Merged XDP
Apple Inc.	DRAWING NUMBER 051-02166 SIZE D
	REVISION 4.0.0
	BRANCH evt-mars-0
	PAGE 18 OF 150
	SHEET 17 OF 108

NOTICE OF PROPRIETARY PROPERTY:
THE INFORMATION CONTAINED HEREIN IS THE PROPRIETARY PROPERTY OF APPLE INC.
THE POSESSOR AGREES TO THE FOLLOWING:
I TO MAINTAIN THIS DOCUMENT IN CONFIDENCE
II NOT TO REPRODUCE OR COPY IT
III NOT TO REVEAL OR PUBLISH IT IN WHOLE OR PART
IV ALL RIGHTS RESERVED

NotebookSchematics.com
Schematics, Boardviews & Smartphone Service Manuals

24MHz CLOCK

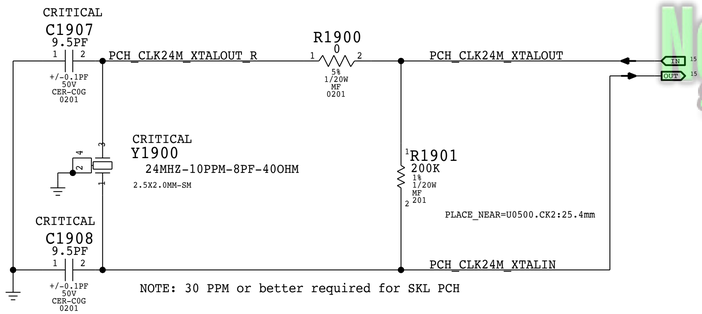

NOTE: 30 PPM or better required for SKL PCH

NotebookSchematics.com
Schematics, Boardviews & Smartphone Service Manuals

BOM_COST_GROUP=CPU & CHIPSET

SYNC_MASTER=J132_JIN SYNC_DATE=06/05/2017

PAGE TITLE
Chipset Support 1

Apple Inc.

DRAWING NUMBER 051-02166 SIZE D
REVISION 4.0.0
BRANCH evt-mars-0
PAGE 19 OF 150
SHEET 18 OF 108

NOTICE OF PROPRIETARY PROPERTY:
THE INFORMATION CONTAINED HEREIN IS THE PROPRIETARY PROPERTY OF APPLE INC.
THE POSESSOR AGREES TO THE FOLLOWING:
I TO MAINTAIN THIS DOCUMENT IN CONFIDENCE
II NOT TO REPRODUCE OR COPY IT
III NOT TO REVEAL OR PUBLISH IT IN WHOLE OR PART
IV ALL RIGHTS RESERVED

Platform Reset Connections

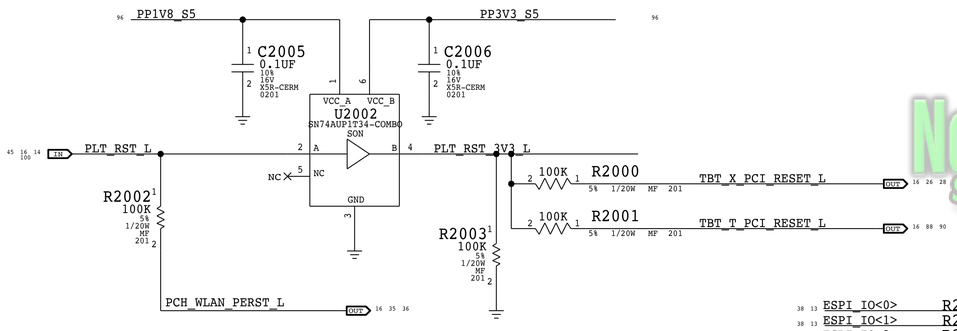

eSPI Analyzer
Placement study first

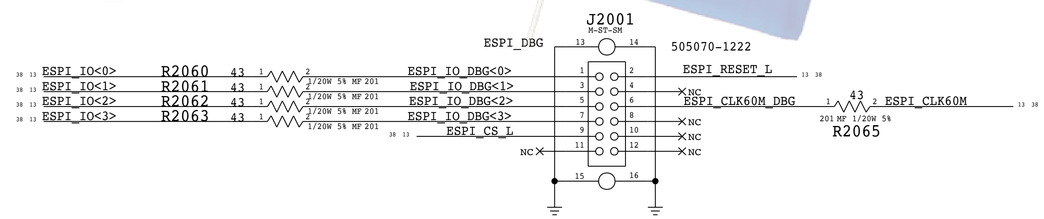

ENABLE DDPB DDPC INTERFACES

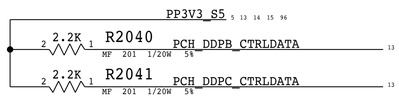

SIGNAL ALIASES

PCH_RTC_RESET_L	MAKE_BASE=TRUE	PCH_RTC_RESET_L
TEST_NOA_N_10	MAKE_BASE=TRUE	TEST_NOA_N_10
TEST_NOA_N_11	MAKE_BASE=TRUE	TEST_NOA_N_11
XDP_BPM_L<3..1>	MAKE_BASE=TRUE NO_TEST=1	NC_XDP_BPM_L<3..1>

ALL_SYS_PWRGD QUALIFIER

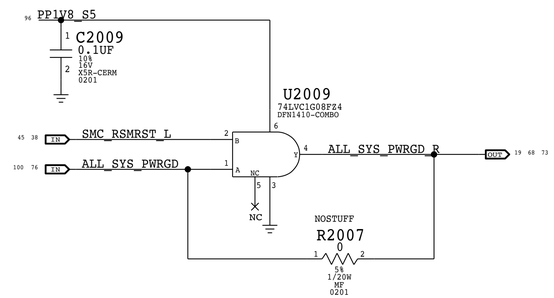

SLP_S0# LEVEL SHIFTER

VCCST_PWRGD LEVEL SHIFTER

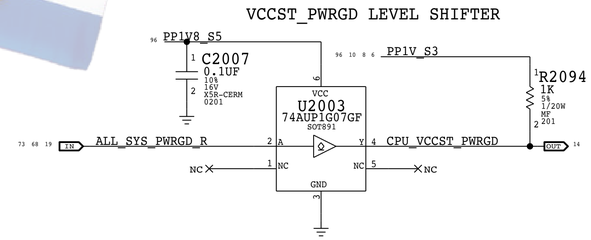

TPs for Chipset Debug Pins

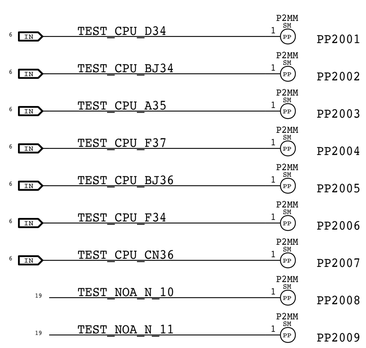

SOC SWD <=> DEBUG MUX PATH

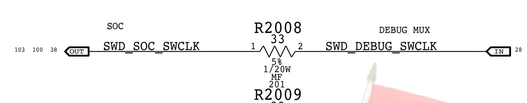

BOM_COST_GROUP=CPU & CHIPSET

PAGE TITLE	Chipset Support 2
Apple Inc.	DRAWING NUMBER 051-02166 SIZE D
	REVISION 4.0.0
NOTICE OF PROPRIETARY PROPERTY: THE INFORMATION CONTAINED HEREIN IS THE PROPRIETARY PROPERTY OF APPLE INC. THE POSESSOR AGREES TO THE FOLLOWING: I TO MAINTAIN THIS DOCUMENT IN CONFIDENCE II NOT TO REPRODUCE OR COPY IT III NOT TO REVEAL OR PUBLISH IT IN WHOLE OR PART IV ALL RIGHTS RESERVED	BRANCH evt-mars-0
	PAGE 20 OF 150
	SHEET 19 OF 108

NotebookSchematics.com
Schematics, Boardviews & Smartphone Service Manuals

NotebookSchematics.com
Schematics, Boardviews & Smartphone Service Manuals

CPU-Based Margining

VRef Dividers

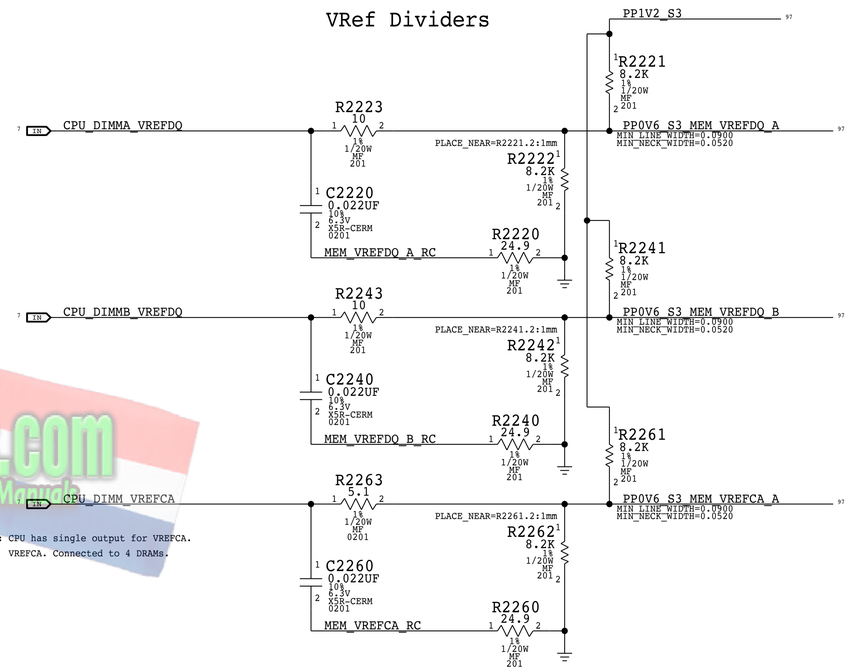

NOTE: CPU has single output for VREFCA.
VREFCA. Connected to 4 DRAMs.

NotebookSchematics.com
Schematics, Boardviews & Smartphone Service Manuals

NotebookSchematics.com
Schematics, Boardviews & Smartphone Service Manuals

BOM_COST_GROUP=CPU & CHIPSET

SYNC_MASTER=J79A_MLB SYNC_DATE=01/31/2017

PAGE TITLE
LPDDR3 VREF Margining

Apple Inc.

DRAWING NUMBER 051-02166
SIZE D
REVISION 4.0.0
BRANCH evt-mars-0
PAGE 22 OF 150
SHEET 20 OF 108

NOTICE OF PROPRIETARY PROPERTY:
THE INFORMATION CONTAINED HEREIN IS THE PROPRIETARY PROPERTY OF APPLE INC.
THE POSESSOR AGREES TO THE FOLLOWING:
I TO MAINTAIN THIS DOCUMENT IN CONFIDENCE
II NOT TO REPRODUCE OR COPY IT
III NOT TO REVEAL OR PUBLISH IT IN WHOLE OR PART
IV ALL RIGHTS RESERVED

LPDDR3 CHANNEL A (0-31)

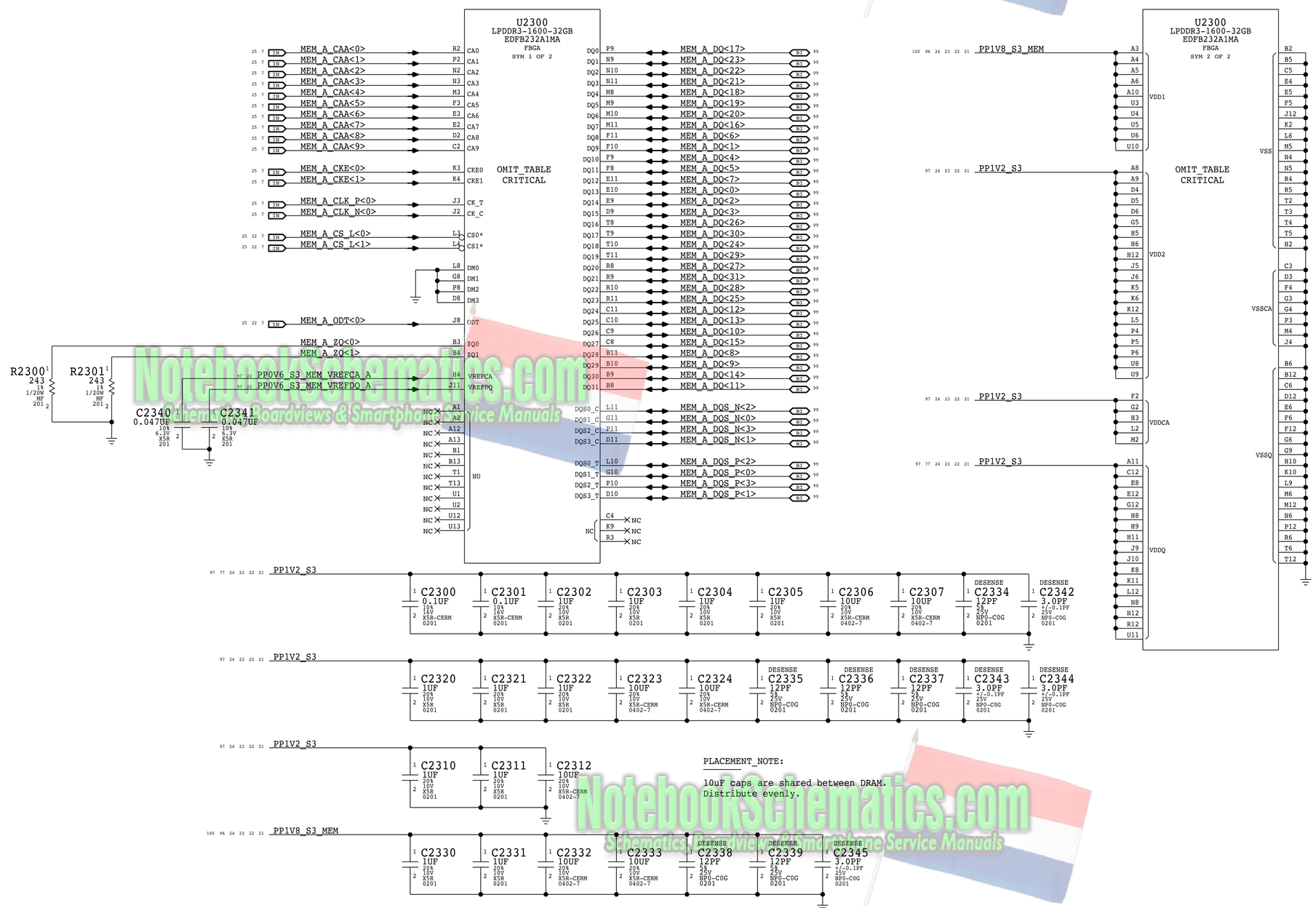

PLACEMENT_NOTE:

10uF caps are shared between DRAM.
Distribute evenly.

BOM_COST_GROUP=DRAM

SYNC_MASTER=J79A_MLB SYNC_DATE=01/31/2017

PAGE TITLE
LPDDR3 DRAM Channel A (00-31)

Apple Inc.

DRAWING NUMBER	051-02166
SIZE	D
REVISION	4.0.0
BRANCH	evt-mars-0
PAGE	23 OF 150
SHEET	21 OF 108

NOTICE OF PROPRIETARY PROPERTY:
THE INFORMATION CONTAINED HEREIN IS THE PROPRIETARY PROPERTY OF APPLE INC.
THE POSESSOR AGREES TO THE FOLLOWING:
I TO MAINTAIN THIS DOCUMENT IN CONFIDENCE
II NOT TO REPRODUCE OR COPY IT
III NOT TO REVEAL OR PUBLISH IT IN WHOLE OR PART
IV ALL RIGHTS RESERVED

LPDDR3 CHANNEL A (32-63)

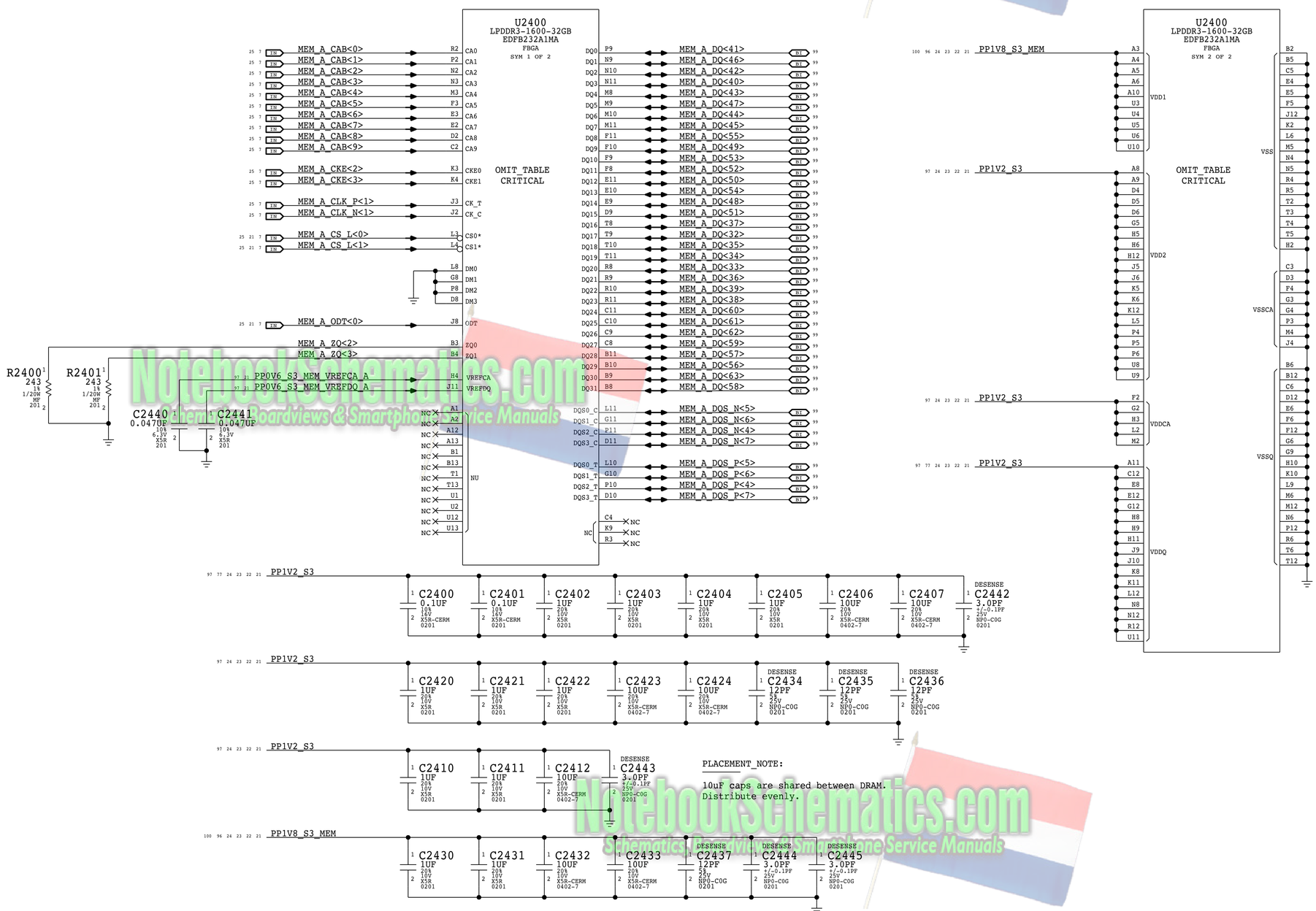

PLACEMENT_NOTE:

10uF caps are shared between DRAM.
Distribute evenly.

BOM_COST_GROUP=DRAM

SYNC_MASTER=J79A_MLB SYNC_DATE=01/31/2017

PAGE TITLE
LPDDR3 DRAM Channel A (32-63)

Apple Inc.

DRAWING NUMBER	051-02166
SIZE	D
REVISION	4.0.0
BRANCH	evt-mars-0
PAGE	24 OF 150
SHEET	22 OF 108

NOTICE OF PROPRIETARY PROPERTY:
THE INFORMATION CONTAINED HEREIN IS THE PROPRIETARY PROPERTY OF APPLE INC.
THE POSESSOR AGREES TO THE FOLLOWING:
I TO MAINTAIN THIS DOCUMENT IN CONFIDENCE
II NOT TO REPRODUCE OR COPY IT
III NOT TO REVEAL OR PUBLISH IT IN WHOLE OR PART
IV ALL RIGHTS RESERVED

LPDDR3 CHANNEL B (0-31)

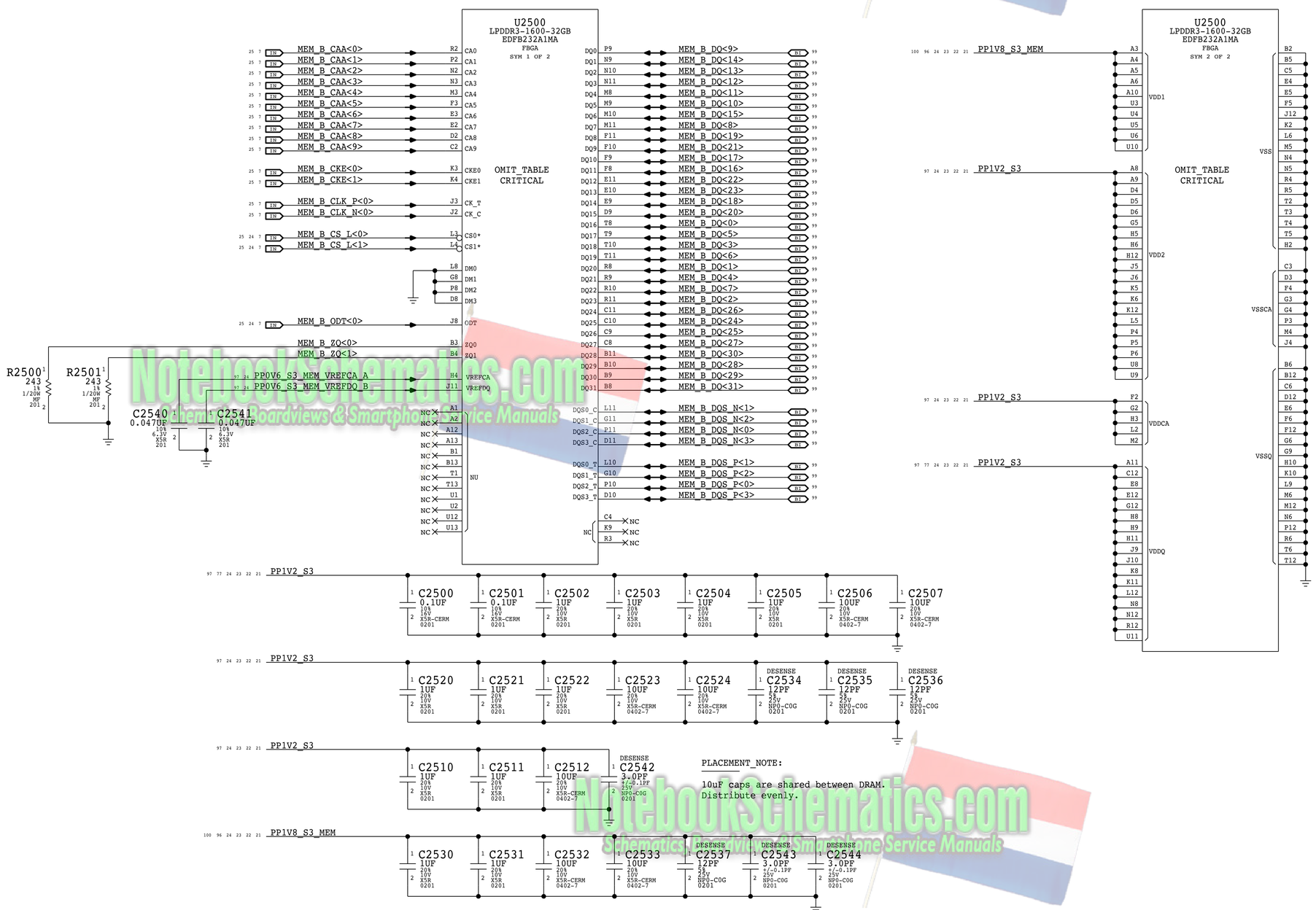

PLACEMENT_NOTE:

10uF caps are shared between DRAM.
Distribute evenly.

BOM_COST_GROUP=DRAM

SYNC_MASTER=J79A_MLB SYNC_DATE=01/31/2017

PAGE TITLE
LPDDR3 DRAM Channel B (00-31)

Apple Inc.

DRAWING NUMBER	051-02166
SIZE	D
REVISION	4.0.0
BRANCH	evt-mars-0
PAGE	25 OF 150
SHEET	23 OF 108

NOTICE OF PROPRIETARY PROPERTY:
THE INFORMATION CONTAINED HEREIN IS THE PROPRIETARY PROPERTY OF APPLE INC.
THE POSESSOR AGREES TO THE FOLLOWING:
I TO MAINTAIN THIS DOCUMENT IN CONFIDENCE
II NOT TO REPRODUCE OR COPY IT
III NOT TO REVEAL OR PUBLISH IT IN WHOLE OR PART
IV ALL RIGHTS RESERVED

LPDDR3 CHANNEL B (32-63)

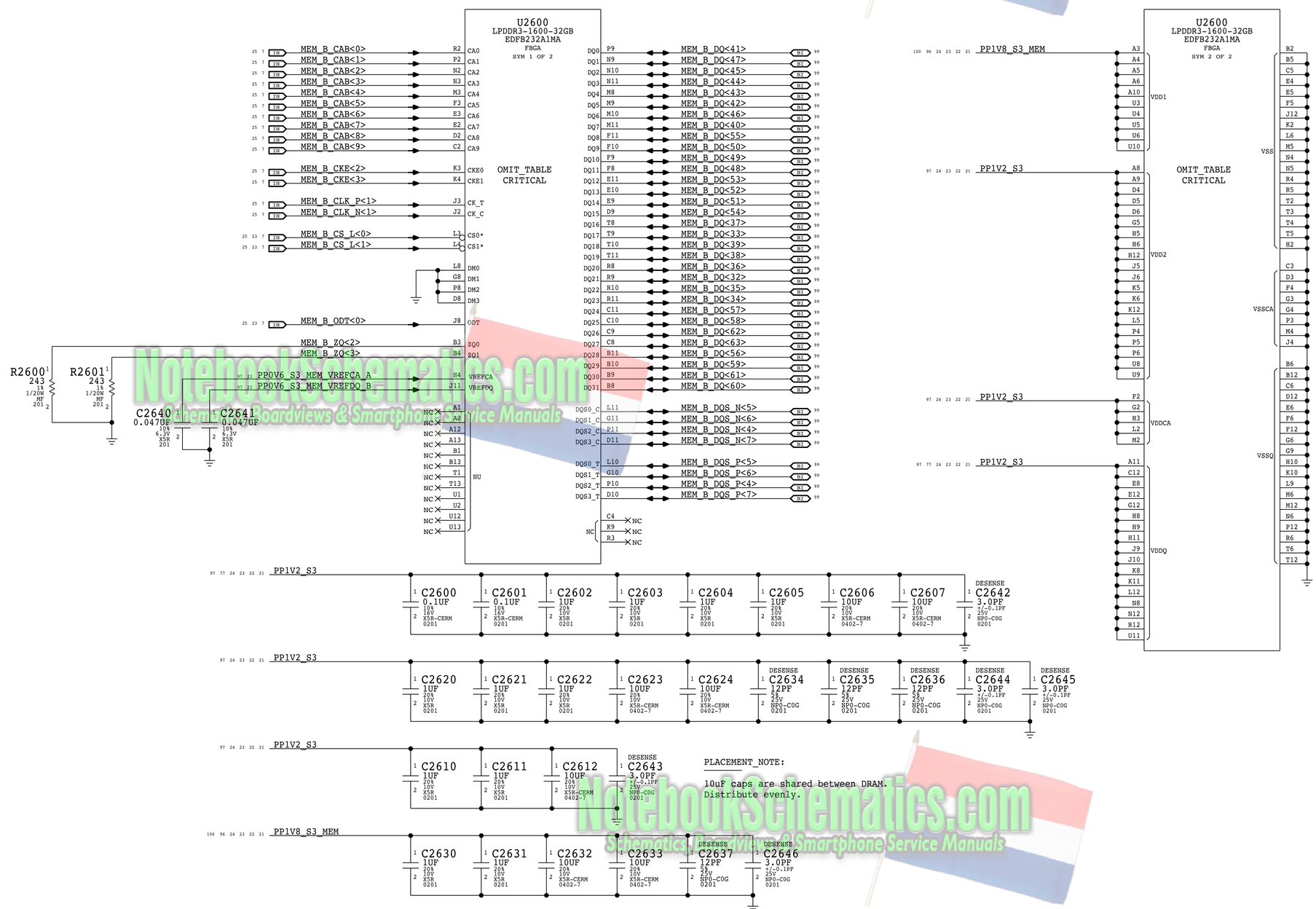

PLACEMENT_NOTE:

10uF caps are shared between DRAM.
Distribute evenly.

BOM_COST_GROUP=DRAM

SYNC_MASTER=J79A_MLB SYNC_DATE=01/31/2017

PAGE TITLE
LPDDR3 DRAM Channel B (32-63)

Apple Inc.

DRAWING NUMBER	051-02166
SIZE	D
REVISION	4.0.0
BRANCH	evt-mars-0
PAGE	26 OF 150
SHEET	24 OF 108

NOTICE OF PROPRIETARY PROPERTY:
THE INFORMATION CONTAINED HEREIN IS THE PROPRIETARY PROPERTY OF APPLE INC.
THE POSESSOR AGREES TO THE FOLLOWING:
I TO MAINTAIN THIS DOCUMENT IN CONFIDENCE
II NOT TO REPRODUCE OR COPY IT
III NOT TO REVEAL OR PUBLISH IT IN WHOLE OR PART
IV ALL RIGHTS RESERVED

Intel recommends 68 Ohm for CMD/ADDR, 80 Ohm for CTRL/CKE, 38 Ohm for CLK

97 PP0V6_S0_DDRVTT

21 7	IN	MEM_A_CAA<9>	R2700	68	1%	1/20W	201	MF	C2700 0.47UF 20% 4V CERM-X5R-1 201	DESENSE C2730 12PF 5% 25V NPO-C0G 0201
21 7	IN	MEM_A_CAA<8>	R2701	68	1%	1/20W	201	MF		
21 7	IN	MEM_A_CAA<6>	R2702	68	1%	1/20W	201	MF		
21 7	IN	MEM_A_CAA<7>	R2703	68	1%	1/20W	201	MF		
21 7	IN	MEM_A_CAA<5>	R2704	68	1%	1/20W	201	MF		
21 7	IN	MEM_A_CLK_P<0>	R2705	39	1%	1/20W	201	MF	C2701 0.47UF 20% 4V CERM-X5R-1 201	C2702 0.47UF 20% 4V CERM-X5R-1 201
21 7	IN	MEM_A_CLK_N<0>	R2706	39	1%	1/20W	201	MF		
21 7	IN	MEM_A_CKE<1>	R2707	82	1%	1/20W	201	MF		
21 7	IN	MEM_A_CKE<0>	R2708	82	1%	1/20W	201	MF		
21 7	IN	MEM_A_CAA<4>	R2709	68	1%	1/20W	201	MF		
21 7	IN	MEM_A_CAA<3>	R2710	68	1%	1/20W	201	MF		
21 7	IN	MEM_A_CAA<2>	R2711	68	1%	1/20W	201	MF		
21 7	IN	MEM_A_CAA<1>	R2712	68	1%	1/20W	201	MF		
21 7	IN	MEM_A_CAA<0>	R2713	68	1%	1/20W	201	MF		
22 7	IN	MEM_A_CAB<9>	R2714	68	1%	1/20W	201	MF	C2703 0.47UF 20% 4V CERM-X5R-1 201	C2704 0.47UF 20% 4V CERM-X5R-1 201
22 7	IN	MEM_A_CAB<8>	R2715	68	1%	1/20W	201	MF		
22 7	IN	MEM_A_CAB<6>	R2716	68	1%	1/20W	201	MF		
22 7	IN	MEM_A_CAB<7>	R2717	68	1%	1/20W	201	MF		
22 7	IN	MEM_A_CAB<5>	R2718	68	1%	1/20W	201	MF		
22 7	IN	MEM_A_CLK_P<1>	R2719	39	1%	1/20W	201	MF	C2705 0.47UF 20% 4V CERM-X5R-1 201	C2706 0.47UF 20% 4V CERM-X5R-1 201
22 7	IN	MEM_A_CLK_N<1>	R2720	39	1%	1/20W	201	MF		
22 7	IN	MEM_A_CKE<2>	R2721	82	1%	1/20W	201	MF		
22 7	IN	MEM_A_CKE<3>	R2722	82	1%	1/20W	201	MF		
22 7	IN	MEM_A_CAB<4>	R2723	68	1%	1/20W	201	MF		
22 7	IN	MEM_A_CAB<2>	R2724	68	1%	1/20W	201	MF		
22 7	IN	MEM_A_CAB<3>	R2725	68	1%	1/20W	201	MF	C2707 0.47UF 20% 4V CERM-X5R-1 201	C2708 0.47UF 20% 4V CERM-X5R-1 201
22 7	IN	MEM_A_CAB<1>	R2726	68	1%	1/20W	201	MF		
22 7	IN	MEM_A_CAB<0>	R2727	68	1%	1/20W	201	MF		
22 21 7	IN	MEM_A_CS_L<0>	R2728	82	1%	1/20W	201	MF		
22 21 7	IN	MEM_A_CS_L<1>	R2729	82	1%	1/20W	201	MF	C2709 0.47UF 20% 4V CERM-X5R-1 201	
22 21 7	IN	MEM_A_ODT<0>	R2730	82	1%	1/20W	201	MF		

CRITICAL C2720 20UF 20% 6.3V CERM-X5R 0402 — DESENSE C2722 3.0PF ±0.1PF 25V NPO-C0G 0201

97 PP0V6_S0_DDRVTT

23 7	IN	MEM_B_CAA<9>	R2740	68	1%	1/20W	201	MF	C2710 0.47UF 20% 4V CERM-X5R-1 201	DESENSE C2731 12PF 5% 25V NPO-C0G 0201
23 7	IN	MEM_B_CAA<8>	R2741	68	1%	1/20W	201	MF		
23 7	IN	MEM_B_CAA<7>	R2742	68	1%	1/20W	201	MF		
23 7	IN	MEM_B_CAA<6>	R2743	68	1%	1/20W	201	MF		
23 7	IN	MEM_B_CAA<5>	R2744	68	1%	1/20W	201	MF		
23 7	IN	MEM_B_CLK_P<0>	R2745	39	1%	1/20W	201	MF	C2711 0.47UF 20% 4V CERM-X5R-1 201	C2712 0.47UF 20% 4V CERM-X5R-1 201
23 7	IN	MEM_B_CLK_N<0>	R2746	39	1%	1/20W	201	MF		
23 7	IN	MEM_B_CKE<1>	R2747	82	1%	1/20W	201	MF		
23 7	IN	MEM_B_CKE<0>	R2748	82	1%	1/20W	201	MF		
23 7	IN	MEM_B_CAA<4>	R2749	68	1%	1/20W	201	MF		
23 7	IN	MEM_B_CAA<2>	R2750	68	1%	1/20W	201	MF		
23 7	IN	MEM_B_CAA<3>	R2751	68	1%	1/20W	201	MF		
23 7	IN	MEM_B_CAA<1>	R2752	68	1%	1/20W	201	MF		
23 7	IN	MEM_B_CAA<0>	R2753	68	1%	1/20W	201	MF		
24 7	IN	MEM_B_CAB<9>	R2754	68	1%	1/20W	201	MF	C2713 0.47UF 20% 4V CERM-X5R-1 201	C2714 0.47UF 20% 4V CERM-X5R-1 201
24 7	IN	MEM_B_CAB<8>	R2755	68	1%	1/20W	201	MF		
24 7	IN	MEM_B_CAB<7>	R2756	68	1%	1/20W	201	MF		
24 7	IN	MEM_B_CAB<6>	R2757	68	1%	1/20W	201	MF		
24 7	IN	MEM_B_CAB<5>	R2758	68	1%	1/20W	201	MF		
24 7	IN	MEM_B_CLK_N<1>	R2759	39	1%	1/20W	201	MF	C2715 0.47UF 20% 4V CERM-X5R-1 201	C2716 0.47UF 20% 4V CERM-X5R-1 201
24 7	IN	MEM_B_CLK_P<1>	R2760	39	1%	1/20W	201	MF		
24 7	IN	MEM_B_CKE<2>	R2761	82	1%	1/20W	201	MF		
24 7	IN	MEM_B_CKE<3>	R2762	82	1%	1/20W	201	MF		
24 7	IN	MEM_B_CAB<4>	R2763	68	1%	1/20W	201	MF		
24 7	IN	MEM_B_CAB<2>	R2764	68	1%	1/20W	201	MF		
24 7	IN	MEM_B_CAB<3>	R2765	68	1%	1/20W	201	MF	C2717 0.47UF 20% 4V CERM-X5R-1 201	C2718 0.47UF 20% 4V CERM-X5R-1 201
24 7	IN	MEM_B_CAB<1>	R2766	68	1%	1/20W	201	MF		
24 7	IN	MEM_B_CAB<0>	R2767	68	1%	1/20W	201	MF		
24 23 7	IN	MEM_B_CS_L<0>	R2768	82	1%	1/20W	201	MF		
24 23 7	IN	MEM_B_CS_L<1>	R2769	82	1%	1/20W	201	MF	C2719 0.47UF 20% 4V CERM-X5R-1 201	
24 23 7	IN	MEM_B_ODT<0>	R2770	82	1%	1/20W	201	MF		

CRITICAL C2740 20UF 20% 6.3V CERM-X5R 0402 — DESENSE C2742 3.0PF ±0.1PF 25V NPO-C0G 0201

NotebookSchematics.com
Schematics, Boardviews & Smartphone Service Manuals

BOM_COST_GROUP=DRAM

SYNC_MASTER=J79A_MLB SYNC_DATE=01/31/2017

PAGE TITLE
LPDDR3 DRAM Termination

Apple Inc.

DRAWING NUMBER 051-02166 SIZE D
REVISION 4.0.0
BRANCH evt-mars-0
PAGE 27 OF 150
SHEET 25 OF 108

NOTICE OF PROPRIETARY PROPERTY:
THE INFORMATION CONTAINED HEREIN IS THE PROPRIETARY PROPERTY OF APPLE INC.
THE POSESSOR AGREES TO THE FOLLOWING:
I TO MAINTAIN THIS DOCUMENT IN CONFIDENCE
II NOT TO REPRODUCE OR COPY IT
III NOT TO REVEAL OR PUBLISH IT IN WHOLE OR PART
IV ALL RIGHTS RESERVED

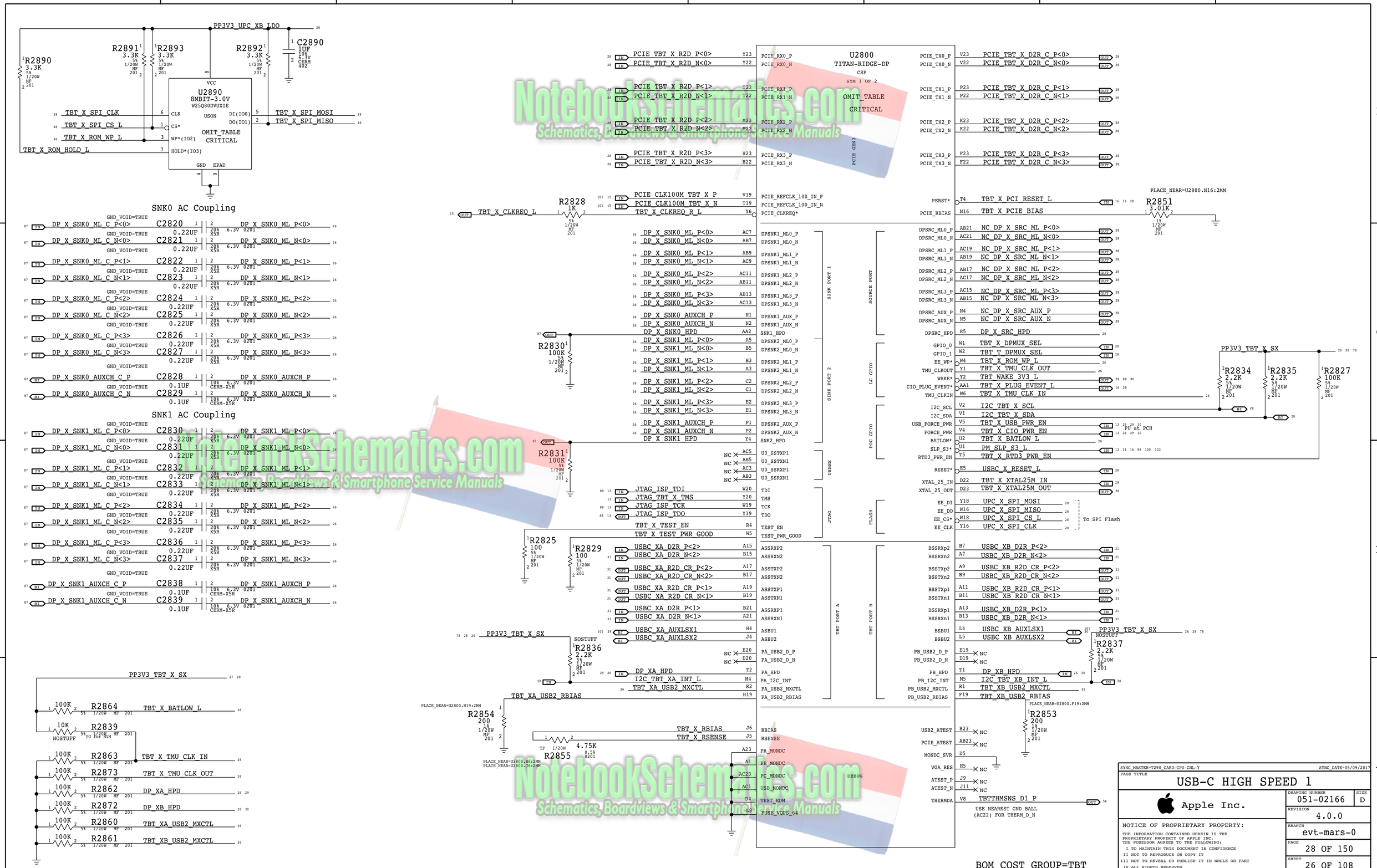

NotebookSchematics.com
Schematics, Boardviews & Smartphone Service Manuals

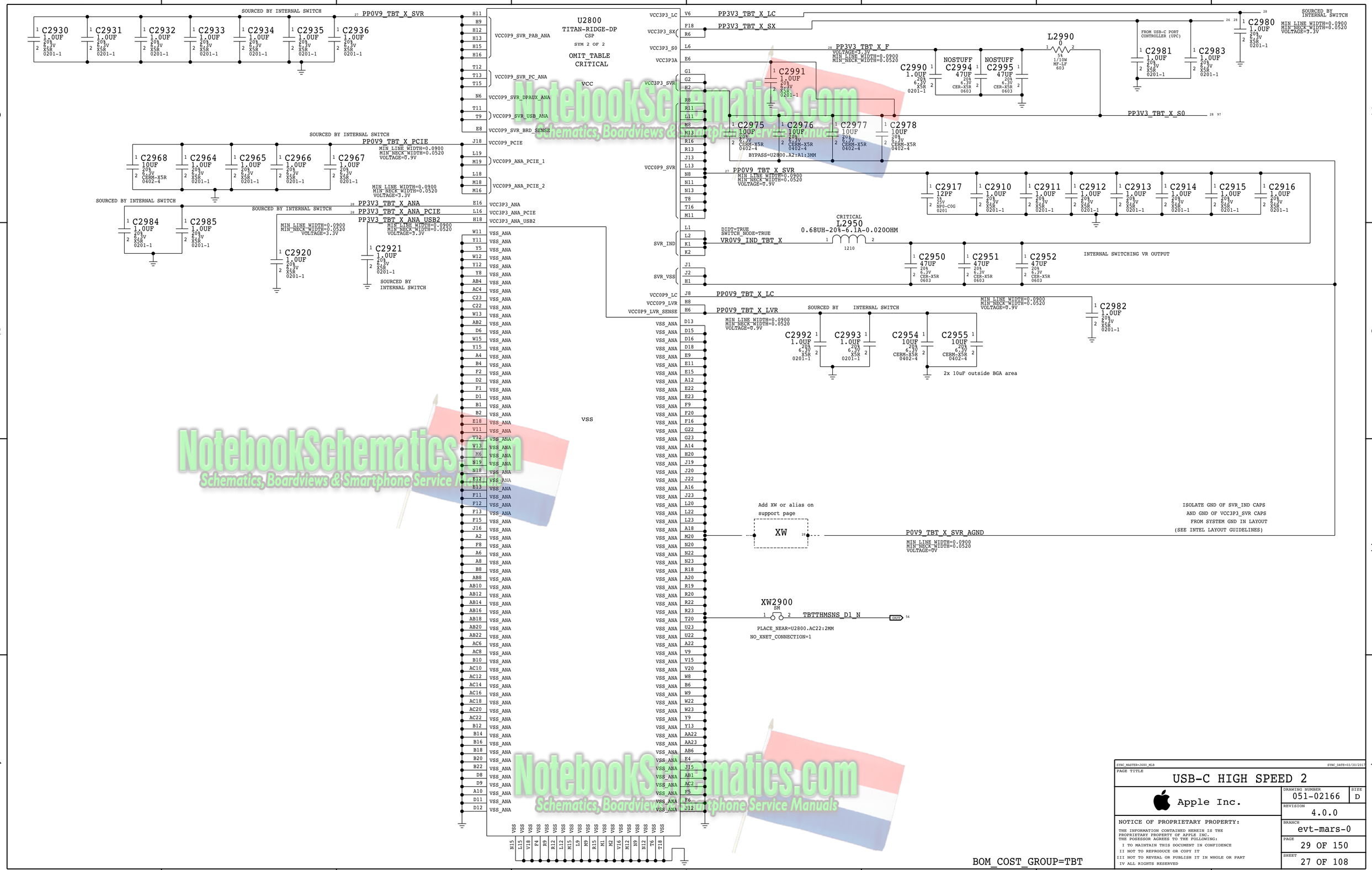
U2800
TITAN-RIDGE-DP
CSP
SYM 2 OF 2
OMIT_TABLE
CRITICAL
VCC
VSS
PP0V9_TBT_X_SVR
PP0V9_TBT_X_PCIE
PP3V3_TBT_X_ANA
PP3V3_TBT_X_ANA_PCIE
PP3V3_TBT_X_ANA_USB2
PP3V3_TBT_X_LC
PP3V3_TBT_X_SX
PP3V3_TBT_X_F
PP3V3_TBT_X_S0
PP0V9_TBT_X_LC
PP0V9_TBT_X_LVR
VR0V9_IND_TBT_X
L2950
0.68UH-20%-6.1A-0.020OHM
L2990
INTERNAL SWITCHING VR OUTPUT
2x 10uF outside BGA area
Add XW or alias on
support page
XW
P0V9_TBT_X_SVR_AGND
ISOLATE GND OF SVR_IND CAPS
AND GND OF VCC3P3_SVR CAPS
FROM SYSTEM GND IN LAYOUT
(SEE INTEL LAYOUT GUIDELINES)
XW2900
TBTTHMSNS_D1_N
PLACE_NEAR=U2800.AC22:2MM
NO_XNET_CONNECTION=1
BOM_COST_GROUP=TBT
USB-C HIGH SPEED 2
Apple Inc.
051-02166
4.0.0
evt-mars-0
29 OF 150
27 OF 108
NOTICE OF PROPRIETARY PROPERTY:
THE INFORMATION CONTAINED HEREIN IS THE PROPRIETARY PROPERTY OF APPLE INC.
THE POSESSOR AGREES TO THE FOLLOWING:
I TO MAINTAIN THIS DOCUMENT IN CONFIDENCE
II NOT TO REPRODUCE OR COPY IT
III NOT TO REVEAL OR PUBLISH IT IN WHOLE OR PART
IV ALL RIGHTS RESERVED

USB VBUS Detect

<rdar://25149752>

29 28 PP20V_USBC_XA_VBUS_F — R3080 30K 5% 1/20W MF 201 — SOC_USB_VBUS (J1 100, J03)

D3001 BZT52C3V0LP DFN10062 (OMIT_TABLE)

Ridge 0.9V SVR XW

27 P0V9_TBT_X_SVR_AGND — XW3000 SHORT-L6-SM — NO_XNET_CONNECTION=1

DP SRC OPTIONS

IF DP SRC NOT USED

26 DP_X_SRC_HPD — R3040 100K 5% 1/20W MF 201

26 NC_DP_X_SRC_ML_P<3..0> — NC_DP_X_SRC_ML_P<3..0> (MAKE_BASE=TRUE NO_TEST=1)

26 NC_DP_X_SRC_ML_N<3..0> — NC_DP_X_SRC_ML_N<3..0> (MAKE_BASE=TRUE NO_TEST=1)

26 NC_DP_X_SRC_AUX_P — NC_DP_X_SRC_AUX_P (MAKE_BASE=TRUE NO_TEST=1)

26 NC_DP_X_SRC_AUX_N — NC_DP_X_SRC_AUX_N (MAKE_BASE=TRUE NO_TEST=1)

TR xtal

26 (IN) TBT_X_XTAL25M_OUT

CRITICAL Y3000 25MHZ-25PPM-20PF-50OHM 2.0X1.60-SM

C3002 20PF 5% 25V C0G 0201

C3003 20PF 5% 25V C0G 0201

26 (OUT) TBT_X_XTAL25M_IN

ARKANOID DEBUG CONN

J3001 505070-1222 M-ST-SM (USBC_DBG)

26 16	TBT_X_PLUG_EVENT_L	TBT_X_PCI_RESET_L	16 19 26
90 88 26	TBT_WAKE_3V3_L	USBC_X_RESET_L	26 28
30 29 26 13	TBT_X_CIO_PWR_EN	PP3V3_TBT_X_SX	26 28 78
30 29 26 13	TBT_X_USB_PWR_EN	PP3V3_TBT_X_ANA_PCIE	27
30 29 28	TBT_POC_RESET	PP3V3_TBT_X_ANA	27
27	PP3V3_TBT_X_F	PP3V3_TBT_X_LC	27

ACE PDs

33 28	UPC_X_5V_EN	R3032 100K 5% 1/20W MF 201	
29	TBT_XA_LSTX	R3020 1M 5% 1/20W MF 201	
29	TBT_XA_LSRX	R3021 1M 5% 1/20W MF 201	
30	TBT_XB_LSTX	R3022 1M 5% 1/20W MF 201	
30	TBT_XB_LSRX	R3023 1M 5% 1/20W MF 201	
29	USB_UPC_XA_P	R3024 1M 5% 1/20W MF 201	
29	USB_UPC_XA_N	R3025 1M 5% 1/20W MF 201	

X ACE-SMC I2C SERIES R'S

PLACE_NEAR=U3900:13mm

29 I2C_UPC_X_SDA2 — R3041 33 5% 1/20W MF 201 — I2C_UPC_SDA (50)

30 I2C_UPC_X_SDA2 (MAKE_BASE=TRUE)

28 I2C_UPC_X_SDA2 (CKPLUS_WAIVE=I2C_PULLUP) — I2C_UPC_XA (50)

PLACE_NEAR=U3900:13mm

29 I2C_UPC_X_SCL2 — R3042 33 5% 1/20W MF 201 — I2C_UPC_SCL (50)

30 I2C_UPC_X_SCL2 (MAKE_BASE=TRUE)

28 I2C_UPC_X_SCL2 (CKPLUS_WAIVE=I2C_PULLUP) — I2C_UPC_SCL (50)

ACE A/B RPD STRAPPING

29 USBC_XA_CC1 — USBC_XA_CC1 (MAKE_BASE=TRUE) (29 32)

29 USBC_XA_CC2 — USBC_XA_CC2 (MAKE_BASE=TRUE) (29 32)

30 USBC_XB_CC1 — USBC_XB_CC1 (MAKE_BASE=TRUE) (30 32)

30 USBC_XB_CC2 — USBC_XB_CC2 (MAKE_BASE=TRUE) (30 32)

FUSES FOR UPC

PLACE_NEAR=Q3100:5MM CRITICAL 0603 F3000 6AMP-32V-0.0095OHM

29 28 PP20V_USBC_XA_VBUS — PP20V_USBC_XA_VBUS_F (28 29)

PLACE_NEAR=Q3200:5MM CRITICAL 0603 740S0135 F3001 6AMP-32V-0.0095OHM

30 28 PP20V_USBC_XB_VBUS — PP20V_USBC_XB_VBUS_F (30)

PART NUMBER	QTY	DESCRIPTION	REFERENCE DES	CRITICAL	BOM OPTION
371S00182	1	DIODE,ZENER,3.0V,7%,250MW,DFN2	D3001		

ARKANOID DEBUG CONN

J3000 505070-1222 M-ST-SM (USBC_DBG)

28 26	I2C_TBT_XB_INT_L	I2C_TBT_XA_INT_L	26 28
28	I2C_UPC_X_SCL2	I2C_TBT_X_SDA	26 28
28	I2C_UPC_X_SDA2	I2C_TBT_X_SCL	26 28
90 50 38	UPC_I2C_INT_L	I2C_UPC_XA_DBG_CTL_SDA	28 29
28	TBT_X_SPI_CLK_DBG	I2C_UPC_XA_DBG_CTL_SCL	28 29
30 29	UPC_XA_UART_TX	UPC_XA_UART_RX	29 30

POWER ALIASES

29	PP3V3_UPC_XA_LDO	PP3V3_UPC_XA_LDO (MAKE_BASE=TRUE)	29
30	PP3V3_UPC_XB_LDO	PP3V3_UPC_XB_LDO (MAKE_BASE=TRUE)	30
30	PP3V3_UPC_XB_LDO		
29 28	PP20V_USBC_XA_VBUS	PP20V_USBC_XA_VBUS (MAKE_BASE=TRUE)	31 100
30 28	PP20V_USBC_XB_VBUS	PP20V_USBC_XB_VBUS (MAKE_BASE=TRUE)	31 100
29	PP5V_S4_X_USBC	PP5V_S4_X_USBC (MAKE_BASE=TRUE)	
30	PP5V_S4_X_USBC	MIN_LINE_WIDTH=0.0900 MIN_NECK_WIDTH=0.0520 VOLTAGE=5V	
33	PP5V_S4_X_USBC		
29	PP3V3_TBT_X_SX	PP3V3_TBT_X_SX (MAKE_BASE=TRUE)	26 28 78
30	PP3V3_TBT_X_SX	MIN_LINE_WIDTH=0.0900 MIN_NECK_WIDTH=0.0520 VOLTAGE=3.3V	
		PP3V3_TBT_X_SX	26 27
97 27	PP3V3_TBT_X_S0	PP3V3_TBT_X_S0 (MAKE_BASE=TRUE) MIN_LINE_WIDTH=0.6000 MIN_NECK_WIDTH=0.2000 VOLTAGE=3.3V	

DCI PCH USB3

15 (IN) USB3_EXTA_R2D_C_P — C3020 0.1UF 10% 16V X5R-CERM 0201

15 (IN) USB3_EXTA_R2D_C_N — C3021 0.1UF 10% 16V X5R-CERM 0201

102 97 PP3V3_G3H — C3022 0.1UF 10% 16V X5R-CERM 0201

U3000 PI3USB32324 QFN-1

15 (OUT)	USB3_EXTA_D2R_P	PCH_USB3_RX_P / USB2_RP_P	USB_DBG_XA_F_P
15 (OUT)	USB3_EXTA_D2R_N	PCH_USB3_RX_N / USB2_RN_N	USB_DBG_XA_F_N
	USB3_EXTA_R2D_P	PCH_USB3_TX_P / USB2_B_P	USBC_XA_USB_DBG_BOT_P
	USB3_EXTA_R2D_N	PCH_USB3_TX_N / USB2_B_N	USBC_XA_USB_DBG_BOT_N
103 100	USB_SOC_TYPEC_P	USB2_EP_P / USB2_T_N	USBC_XA_USB_DBG_TOP_N
103 100	USB_SOC_TYPEC_N	USB2_EP_N / USB2_T_P	USBC_XA_USB_DBG_TOP_P
28 19	SWD_DEBUG_SWCLK	SWCLK / SDA	I2C_UPC_XA_DBG_CTL_SDA
28 19	SWD_DEBUG_SWDIO	SWDIO / SCL	I2C_UPC_XA_DBG_CTL_SCL
29	USBC_XA_USB_TOP_P	ANALOG1 / DEBUG1	UPC_XA_DBG1
29	USBC_XA_USB_TOP_N	ANALOG2 / DEBUG2	UPC_XA_DBG2

VDD, GND, EPAD

L3000 90-OHM-0.1A EXCX4CE (PLACE_NEAR=U3000:5mm)

USB2_UPC_XA_P (28) — USB2_UPC_XA_N (28)

GND ALIASES

29 GND — 30 GND — 29 GND — 29 GND — 29 GND

29 GND — 29 GND — 30 GND — 29 GND

NC ALIASES / NO TEST

30 (IN)	NC_UPC_XB_I2C_ADDR	NC_UPC_XB_I2C_ADDR (NO_TEST=1)	
29	NC_USBC_XA_USB_BOT_P	NC_USBC_XA_USB_BOT_P (MAKE_BASE=TRUE NO_TEST=1)	
29	NC_USBC_XA_USB_BOT_N	NC_USBC_XA_USB_BOT_N (MAKE_BASE=TRUE NO_TEST=1)	
29	NC_UPC_XA_SWD_CLK	NC_UPC_XA_SWD_CLK (MAKE_BASE=TRUE NO_TEST=1)	
29	NC_UPC_XA_SWD_DATA	NC_UPC_XA_SWD_DATA (MAKE_BASE=TRUE NO_TEST=1)	
30	NC_UPC_XB_SWD_CLK	NC_UPC_XB_SWD_CLK (MAKE_BASE=TRUE NO_TEST=1)	
30	NC_UPC_XB_SWD_DATA	NC_UPC_XB_SWD_DATA (MAKE_BASE=TRUE NO_TEST=1)	

SIGNAL ALIASES

29	UPC_X_5V_EN	UPC_X_5V_EN (MAKE_BASE=TRUE)	28 33
30	UPC_X_5V_EN		
29	UPC_PMU_RESET	UPC_PMU_RESET (MAKE_BASE=TRUE)	66 76 90 100
30	UPC_PMU_RESET		
28 26	UPC_X_SPI_CLK	UPC_X_SPI_CLK (MAKE_BASE=TRUE)	
28 26	UPC_X_SPI_CS_L	UPC_X_SPI_CS_L (MAKE_BASE=TRUE)	
28 26	UPC_X_SPI_MOSI	UPC_X_SPI_MOSI (MAKE_BASE=TRUE)	
28 26	UPC_X_SPI_MISO	UPC_X_SPI_MISO (MAKE_BASE=TRUE)	
90 88	UPC_T_SPI_CLK	UPC_T_SPI_CLK (MAKE_BASE=TRUE)	
90 88	UPC_T_SPI_CS_L	UPC_T_SPI_CS_L (MAKE_BASE=TRUE)	
90 88	UPC_T_SPI_MOSI	UPC_T_SPI_MOSI (MAKE_BASE=TRUE)	
90 88	UPC_T_SPI_MISO	UPC_T_SPI_MISO (MAKE_BASE=TRUE)	
30 29 28	TBT_POC_RESET	TBT_POC_RESET (MAKE_BASE=TRUE)	13 90
87	TBT_X_DPMUX_SEL	TBT_X_DPMUX_SEL (MAKE_BASE=TRUE)	16
26	TBT_X_DPMUX_SEL		
88	TBT_X_DPMUX_SEL		
87	TBT_T_DPMUX_SEL	TBT_T_DPMUX_SEL (MAKE_BASE=TRUE)	16
26	TBT_T_DPMUX_SEL		
88	TBT_T_DPMUX_SEL		
29	XDP_USB_EXTA_OC_L	XDP_USB_EXTA_OC_L (MAKE_BASE=TRUE)	5 17
30	XDP_USB_EXTB_OC_L	XDP_USB_EXTB_OC_L (MAKE_BASE=TRUE)	5 17
30	PCH_UART_DEBUG_R2D	PCH_UART_DEBUG_R2D (MAKE_BASE=TRUE)	13 100 103
30	PCH_UART_DEBUG_D2R	PCH_UART_DEBUG_D2R (MAKE_BASE=TRUE)	13 100 103
30	UPC_XB_DBG3	33 1/20W 5% 201 MF — R3008 — SWD_DEBUG_SWCLK (MAKE_BASE=TRUE)	28 19
30	UPC_XB_DBG4	33 1/20W 5% 201 MF — R3009 — SWD_DEBUG_SWDIO (MAKE_BASE=TRUE)	28 19
29	NC_USBC_XA_RESET_L	NC_USBC_XA_RESET_L (MAKE_BASE=TRUE)	
30	USBC_X_RESET_L	USBC_X_RESET_L (MAKE_BASE=TRUE)	26 28
15	USB2_UPC_XA_N	USB2_UPC_XA_N (MAKE_BASE=TRUE)	
28	USB2_UPC_XA_N		
15	USB2_UPC_XA_P	USB2_UPC_XA_P (MAKE_BASE=TRUE)	
28	USB2_UPC_XA_P		
15	USB2_UPC_XB_N	USB2_UPC_XB_N (MAKE_BASE=TRUE)	
30	USB2_UPC_XB_N		
15	USB2_UPC_XB_P	USB2_UPC_XB_P (MAKE_BASE=TRUE)	
30	USB2_UPC_XB_P		
29	SOC_DFU_STATUS	SOC_DFU_STATUS (MAKE_BASE=TRUE)	37 100 103
29	SOC_FORCE_DFU	SOC_FORCE_DFU (MAKE_BASE=TRUE)	37 76 100 103

SCHOTTKY DIODES FOR DM2

31 26	USBC_XA_USB_DBG_TOP_P	D3090 DFN1006 BAS70LP-COMBO
31 26	USBC_XA_USB_DBG_TOP_N	D3091 DFN1006 BAS70LP-COMBO
31 28	USBC_XA_USB_DBG_BOT_P	D3092 DFN1006 BAS70LP-COMBO
31 28	USBC_XA_USB_DBG_BOT_N	D3093 DFN1006 BAS70LP-COMBO

TR/ACE SPI BUS SERIES R'S

26	TBT_X_SPI_CLK	R3094 100	TBT_X_SPI_CLK_DBG	28
26	TBT_X_SPI_CS_L	R3095 15	UPC_XB_SPI_CLK	(IN) 30
26	TBT_X_SPI_MOSI	R3096 15	UPC_XB_SPI_CS_L	(IN) 30
26	TBT_X_SPI_MISO	R3097 15	UPC_XB_SPI_MOSI	(IN) 30
	ROM	R3098 15	UPC_XB_SPI_MISO	(OUT) 30
		R3090 15	UPC_X_SPI_CLK	(IN) 26 28
		R3091 15	UPC_X_SPI_CS_L	(IN) 26 28
		R3092 15	UPC_X_SPI_MOSI	(IN) 26 28
		R3093 15	UPC_X_SPI_MISO	(OUT) 26 28

USBC DEBUG CONN — Ace — TR

TBT to ACE

TBT — Titan Ridge U2800 (MASTER)

Pri ACE — U3100 (Write: 0x70 Read: 0x71)

MAKE_BASE=TRUE 26 28	I2C_TBT_X_SCL	I2C_TBT_X_SCL 29
MAKE_BASE=TRUE 26 28	I2C_TBT_X_SDA	I2C_TBT_X_SDA 29
MAKE_BASE=TRUE 26 28	I2C_TBT_XA_INT_L	I2C_TBT_XA_INT_L 29
MAKE_BASE=TRUE 26 28	I2C_TBT_XB_INT_L	

Sec ACE — U3200 (Write: 0x7E Read: 0x7F)

I2C_TBT_X_SCL	30
I2C_TBT_X_SDA	30
I2C_TBT_XB_INT_L	30

Ridge PCIE Caps

D2R

26 (IN)	PCIE_TBT_X_D2R_C_P<0>	C3050 0.22UF	PCIE_TBT_X_D2R_P<0> (OUT) 15 101
26 (IN)	PCIE_TBT_X_D2R_C_N<0>	C3051 0.22UF	PCIE_TBT_X_D2R_N<0> (OUT) 15 101
26 (IN)	PCIE_TBT_X_D2R_C_P<1>	C3052 0.22UF	PCIE_TBT_X_D2R_P<1> (OUT) 15
26 (IN)	PCIE_TBT_X_D2R_C_N<1>	C3053 0.22UF	PCIE_TBT_X_D2R_N<1> (OUT) 15
26 (IN)	PCIE_TBT_X_D2R_C_P<2>	C3054 0.22UF	PCIE_TBT_X_D2R_P<2> (OUT) 15
26 (IN)	PCIE_TBT_X_D2R_C_N<2>	C3055 0.22UF	PCIE_TBT_X_D2R_N<2> (OUT) 15
26 (IN)	PCIE_TBT_X_D2R_C_P<3>	C3056 0.22UF	PCIE_TBT_X_D2R_P<3> (OUT) 15
26 (IN)	PCIE_TBT_X_D2R_C_N<3>	C3057 0.22UF	PCIE_TBT_X_D2R_N<3> (OUT) 15

R2D

15 (IN)	PCIE_TBT_X_R2D_C_P<0>	C3040 0.22UF	PCIE_TBT_X_R2D_P<0> (OUT) 26
15 (IN)	PCIE_TBT_X_R2D_C_N<0>	C3041 0.22UF	PCIE_TBT_X_R2D_N<0> (OUT) 26
15 (IN)	PCIE_TBT_X_R2D_C_P<1>	C3042 0.22UF	PCIE_TBT_X_R2D_P<1> (OUT) 26
15 (IN)	PCIE_TBT_X_R2D_C_N<1>	C3043 0.22UF	PCIE_TBT_X_R2D_N<1> (OUT) 26
15 (IN)	PCIE_TBT_X_R2D_C_P<2>	C3044 0.22UF	PCIE_TBT_X_R2D_P<2> (OUT) 26
15 (IN)	PCIE_TBT_X_R2D_C_N<2>	C3045 0.22UF	PCIE_TBT_X_R2D_N<2> (OUT) 26
15 (IN)	PCIE_TBT_X_R2D_C_P<3>	C3046 0.22UF	PCIE_TBT_X_R2D_P<3> (OUT) 26
15 (IN)	PCIE_TBT_X_R2D_C_N<3>	C3047 0.22UF	PCIE_TBT_X_R2D_N<3> (OUT) 26

BOM_COST_GROUP=TBT

PAGE TITLE	USB-C Support
Apple Inc.	DRAWING NUMBER 051-02166 — SIZE D
	REVISION 4.0.0
	BRANCH evt-mars-0
	PAGE 30 OF 150
	SHEET 28 OF 108

NOTICE OF PROPRIETARY PROPERTY:
THE INFORMATION CONTAINED HEREIN IS THE PROPRIETARY PROPERTY OF APPLE INC.
THE POSESSOR AGREES TO THE FOLLOWING:
I TO MAINTAIN THIS DOCUMENT IN CONFIDENCE
II NOT TO REPRODUCE OR COPY IT
III NOT TO REVEAL OR PUBLISH IT IN WHOLE OR PART
IV ALL RIGHTS RESERVED

NotebookSchematics.com
Schematics, Boardviews & Smartphone Service Manuals

PRIMARY ACE USB-C PORT CONTROLLER (UPC)

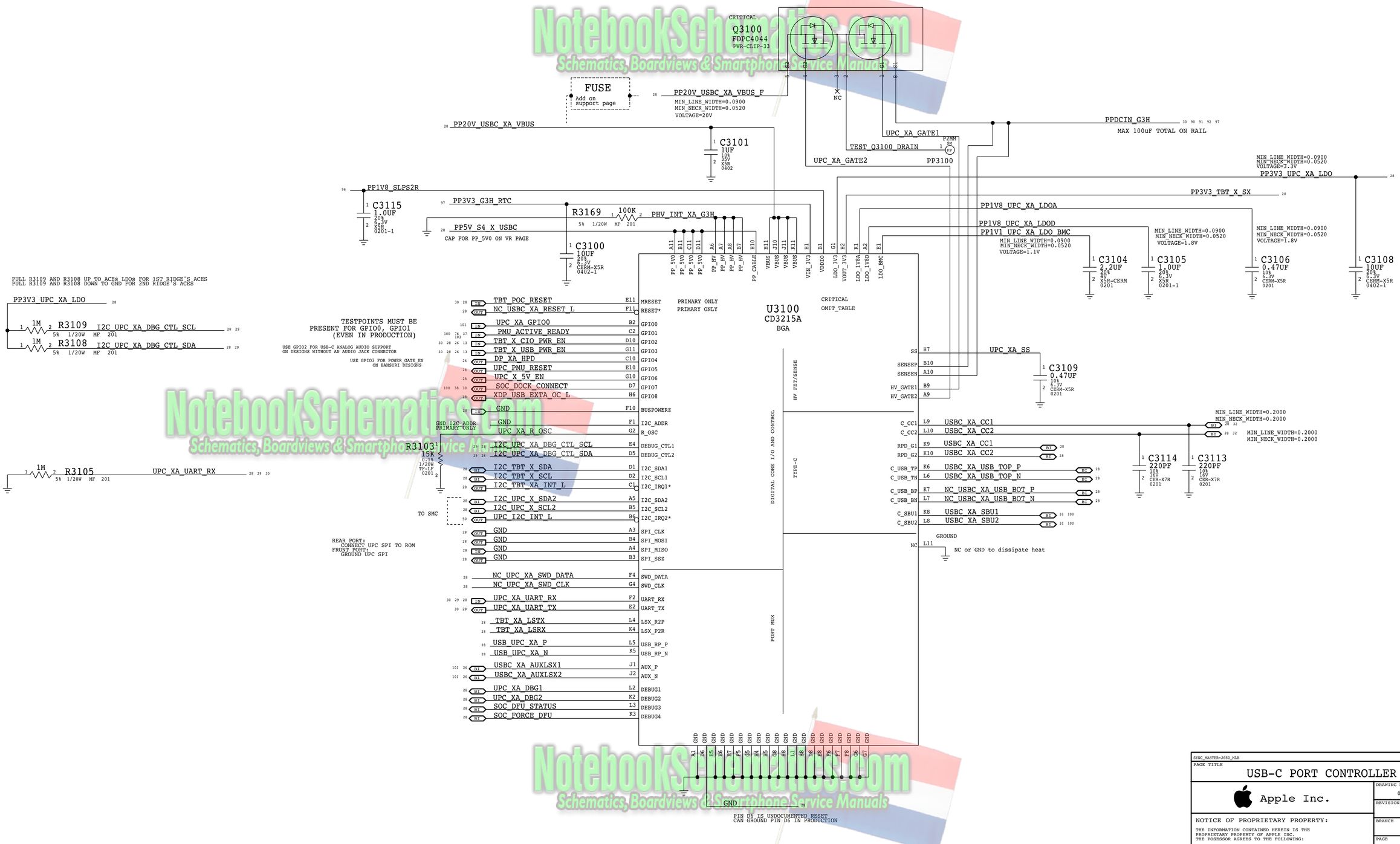

BOM_COST_GROUP=USB-C

SYNC_MASTER=J680_MLB SYNC_DATE=03/30/2017

PAGE TITLE

USB-C PORT CONTROLLER A

Apple Inc.

DRAWING NUMBER 051-02166 SIZE D

REVISION 4.0.0

BRANCH evt-mars-0

PAGE 31 OF 150

SHEET 29 OF 108

NOTICE OF PROPRIETARY PROPERTY:

THE INFORMATION CONTAINED HEREIN IS THE PROPRIETARY PROPERTY OF APPLE INC.
THE POSESSOR AGREES TO THE FOLLOWING:
I TO MAINTAIN THIS DOCUMENT IN CONFIDENCE
II NOT TO REPRODUCE OR COPY IT
III NOT TO REVEAL OR PUBLISH IT IN WHOLE OR PART
IV ALL RIGHTS RESERVED

SECONDARY ACE USB-C PORT CONTROLLER (UPC)

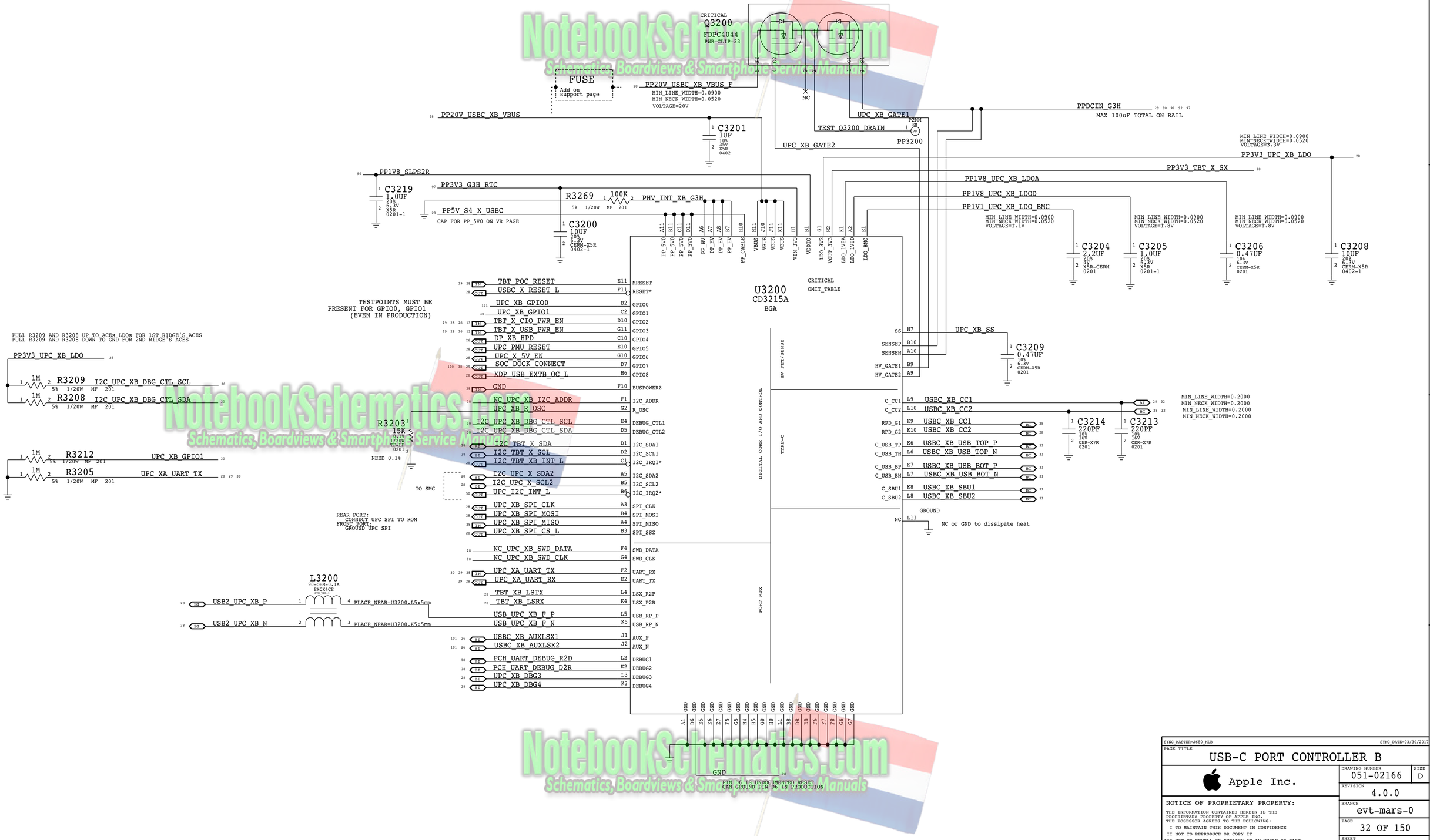

NotebookSchematics.com
Schematics, Boardviews & Smartphone Service Manuals

SYNC_MASTER=J680_MLB SYNC_DATE=03/30/2017

PAGE TITLE
USB-C PORT CONTROLLER B

Apple Inc.

DRAWING NUMBER 051-02166 SIZE D
REVISION 4.0.0
BRANCH evt-mars-0
PAGE 32 OF 150
SHEET 30 OF 108

NOTICE OF PROPRIETARY PROPERTY:
THE INFORMATION CONTAINED HEREIN IS THE PROPRIETARY PROPERTY OF APPLE INC.
THE POSESSOR AGREES TO THE FOLLOWING:
I TO MAINTAIN THIS DOCUMENT IN CONFIDENCE
II NOT TO REPRODUCE OR COPY IT
III NOT TO REVEAL OR PUBLISH IT IN WHOLE OR PART
IV ALL RIGHTS RESERVED

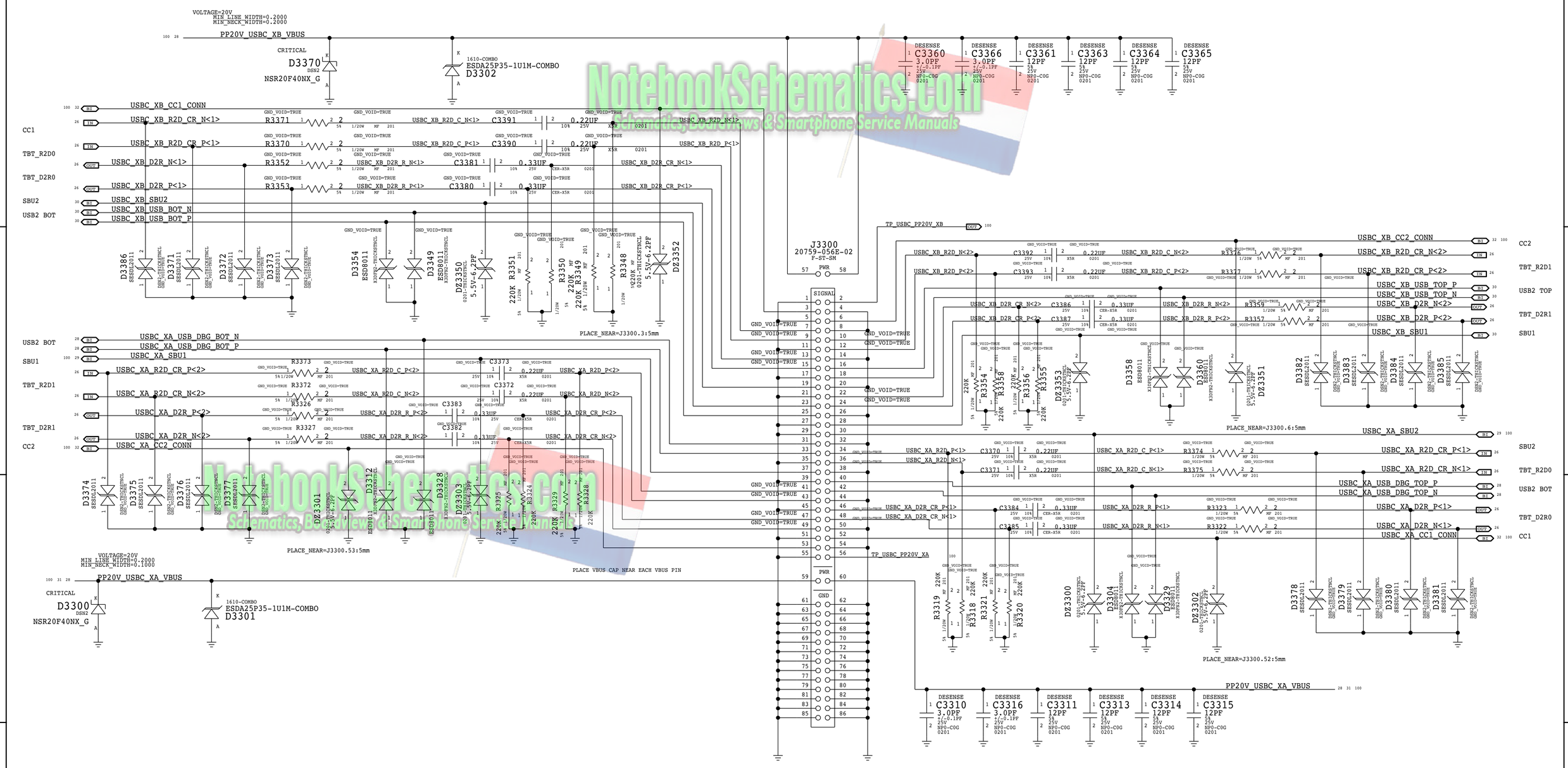

LAST CHANGE: Wed Apr 1 22:57:37 2015

PAGE TITLE

USB-C CONNECTOR A

Apple Inc.

DRAWING NUMBER 051-02166 | SIZE D

REVISION 4.0.0

BRANCH evt-mars-0

PAGE 33 OF 150

SHEET 31 OF 108

NOTICE OF PROPRIETARY PROPERTY:
THE INFORMATION CONTAINED HEREIN IS THE PROPRIETARY PROPERTY OF APPLE INC.
THE POSESSOR AGREES TO THE FOLLOWING:
I TO MAINTAIN THIS DOCUMENT IN CONFIDENCE
II NOT TO REPRODUCE OR COPY IT
III NOT TO REVEAL OR PUBLISH IT IN WHOLE OR PART
IV ALL RIGHTS RESERVED

XA CC Protection

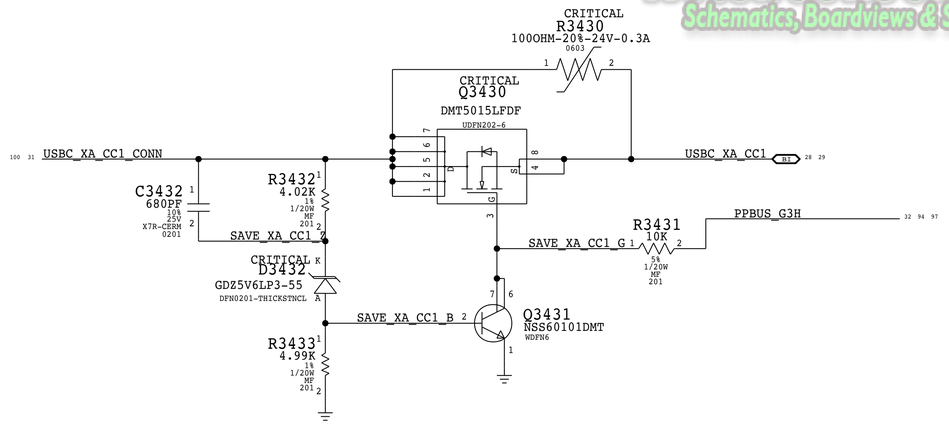

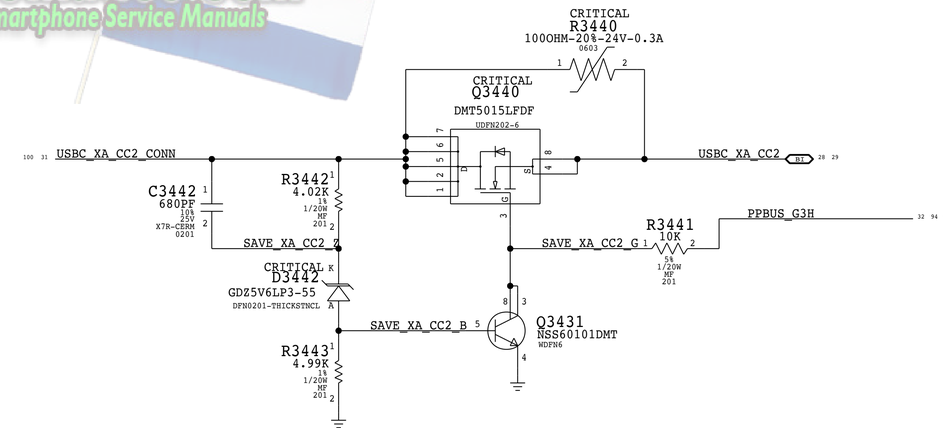

XB CC Protection

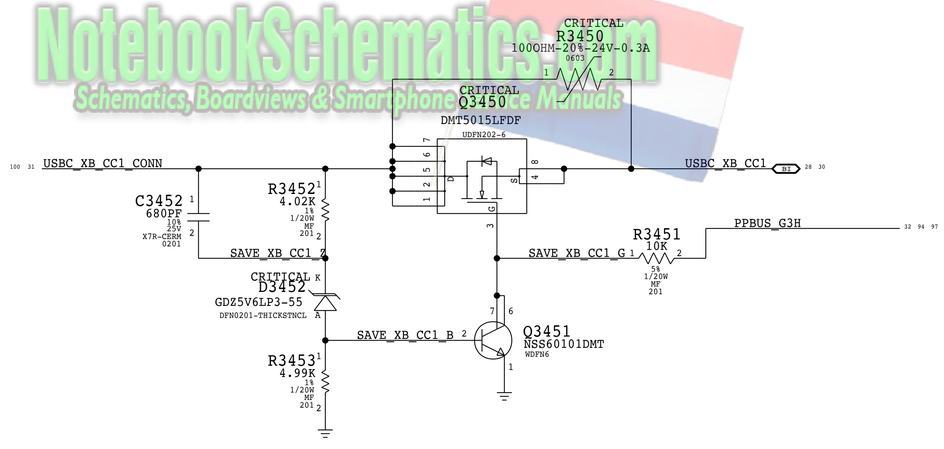

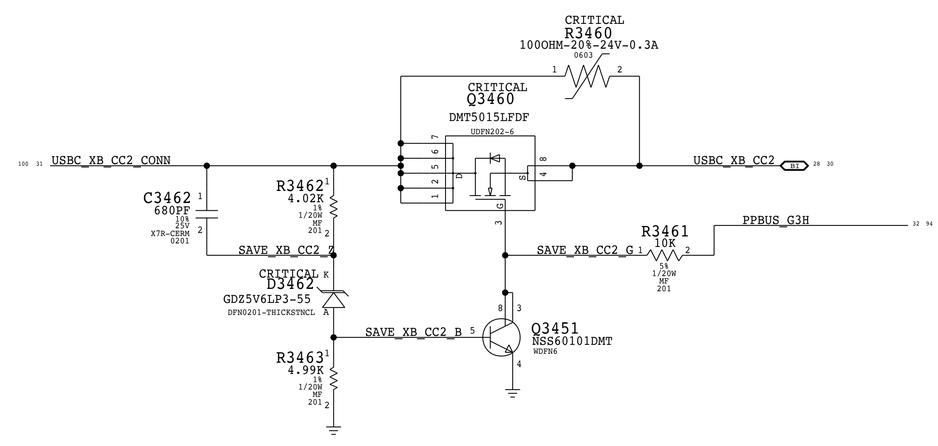

BOM_COST_GROUP=USB-C

DESIGN: X1032/MLB P4BP
LAST CHANGE: Fri Jan 6 16:01:21 2017

PAGE TITLE
USBC X Connector Support

Apple Inc.

DRAWING NUMBER 051-02166
SIZE D
REVISION 4.0.0
BRANCH evt-mars-0
PAGE 34 OF 150
SHEET 32 OF 108

NOTICE OF PROPRIETARY PROPERTY:
THE INFORMATION CONTAINED HEREIN IS THE PROPRIETARY PROPERTY OF APPLE INC.
THE POSESSOR AGREES TO THE FOLLOWING:
I TO MAINTAIN THIS DOCUMENT IN CONFIDENCE
II NOT TO REPRODUCE OR COPY IT
III NOT TO REVEAL OR PUBLISH IT IN WHOLE OR PART
IV ALL RIGHTS RESERVED

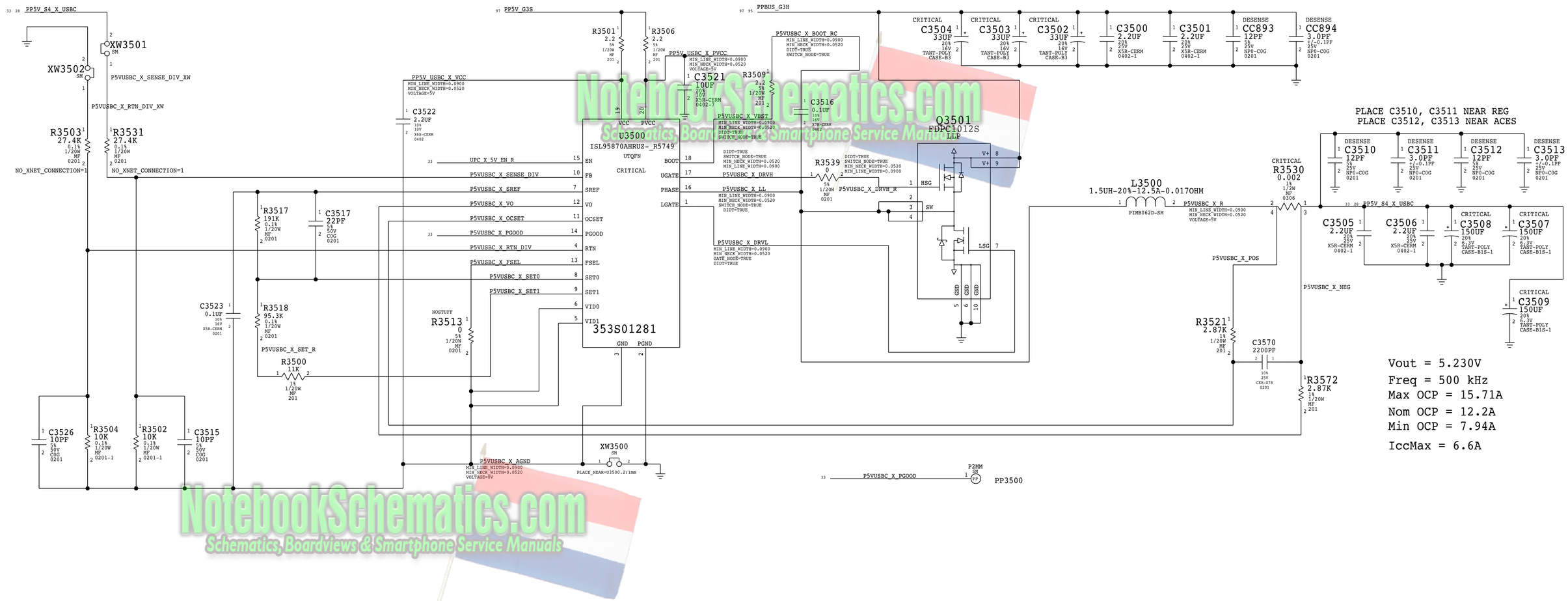

UPC X 5V EN QUALIFIER

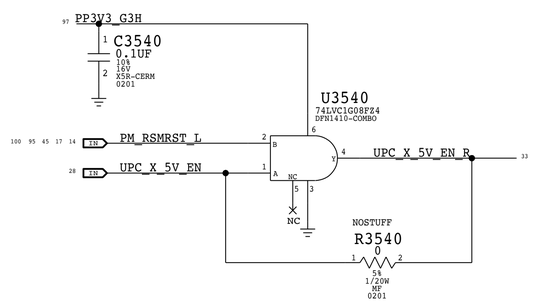

BOM_COST_GROUP=USB-C

PAGE TITLE	TBT 5V REGULATOR
Apple Inc.	DRAWING NUMBER 051-02166 SIZE D
	REVISION 4.0.0
	BRANCH evt-mars-0
	PAGE 35 OF 150
	SHEET 33 OF 108

NOTICE OF PROPRIETARY PROPERTY:
THE INFORMATION CONTAINED HEREIN IS THE PROPRIETARY PROPERTY OF APPLE INC.
THE POSESSOR AGREES TO THE FOLLOWING:
I TO MAINTAIN THIS DOCUMENT IN CONFIDENCE
II NOT TO REPRODUCE OR COPY IT
III NOT TO REVEAL OR PUBLISH IT IN WHOLE OR PART
IV ALL RIGHTS RESERVED

NotebookSchematics.com
Schematics, Boardviews & Smartphone Service Manuals

Software	I2S_SEL	UART_SEL	I2S I/F	UART I/F
Gen1 (macOS)	0	1	UART (PCH)	UART (PCH)
Gen1 (Bootcamp)	1	1	I2S (PCH)	UART (PCH)
Gen2	X	0	X	UART (SOC)

NotebookSchematics.com
Schematics, Boardviews & Smartphone Service Manuals

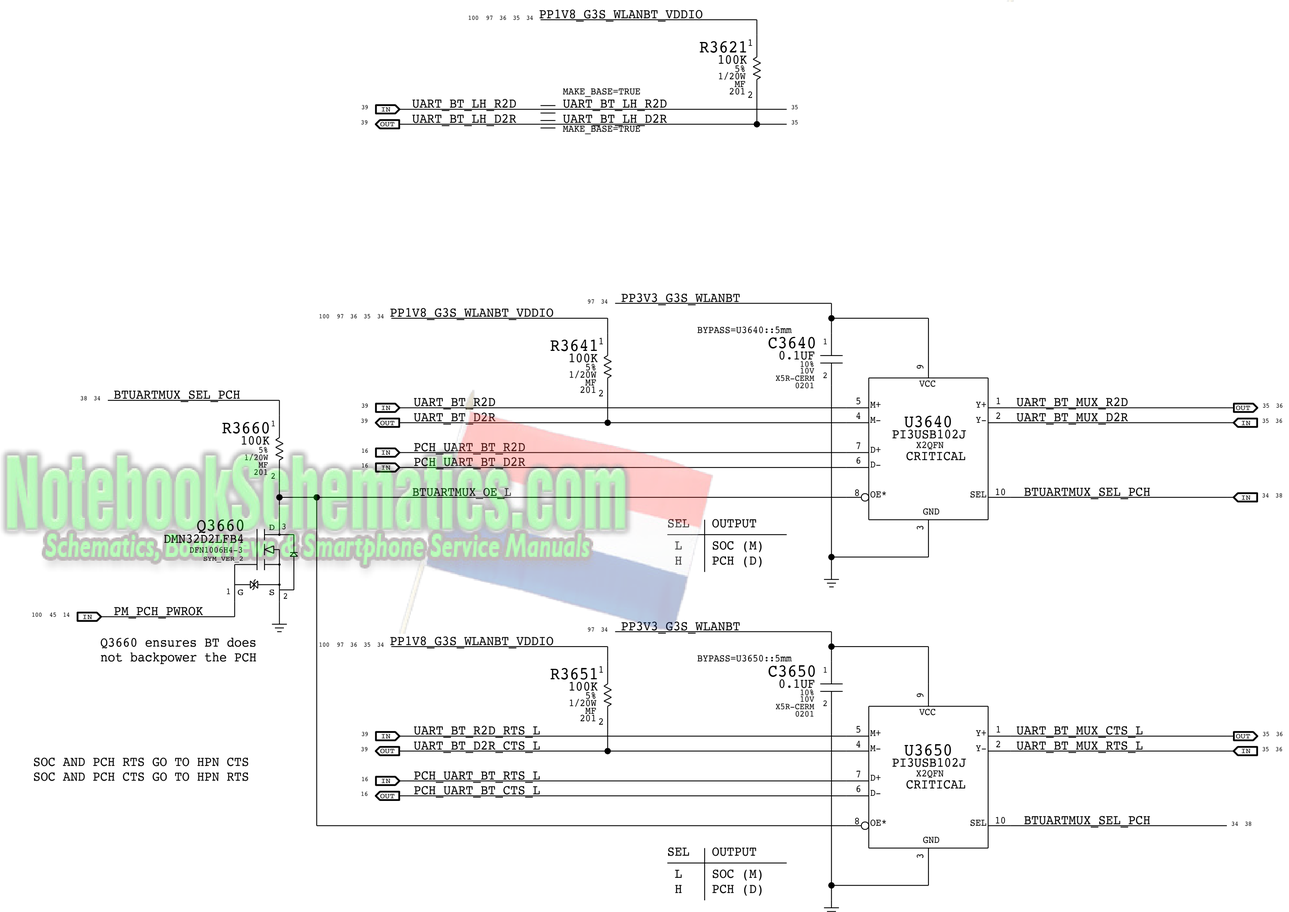

NotebookSchematics.com
Schematics, Boardviews & Smartphone Service Manuals

BOM_COST_GROUP=WIRELESS

SYNC_MASTER=J132_JACK SYNC_DATE=05/30/2017

PAGE TITLE
WIFI/BT: Support

Apple Inc.

DRAWING NUMBER 051-02166 SIZE D
REVISION 4.0.0
BRANCH evt-mars-0
PAGE 36 OF 150
SHEET 34 OF 108

NOTICE OF PROPRIETARY PROPERTY:
THE INFORMATION CONTAINED HEREIN IS THE PROPRIETARY PROPERTY OF APPLE INC.
THE POSESSOR AGREES TO THE FOLLOWING:
I TO MAINTAIN THIS DOCUMENT IN CONFIDENCE
II NOT TO REPRODUCE OR COPY IT
III NOT TO REVEAL OR PUBLISH IT IN WHOLE OR PART
IV ALL RIGHTS RESERVED

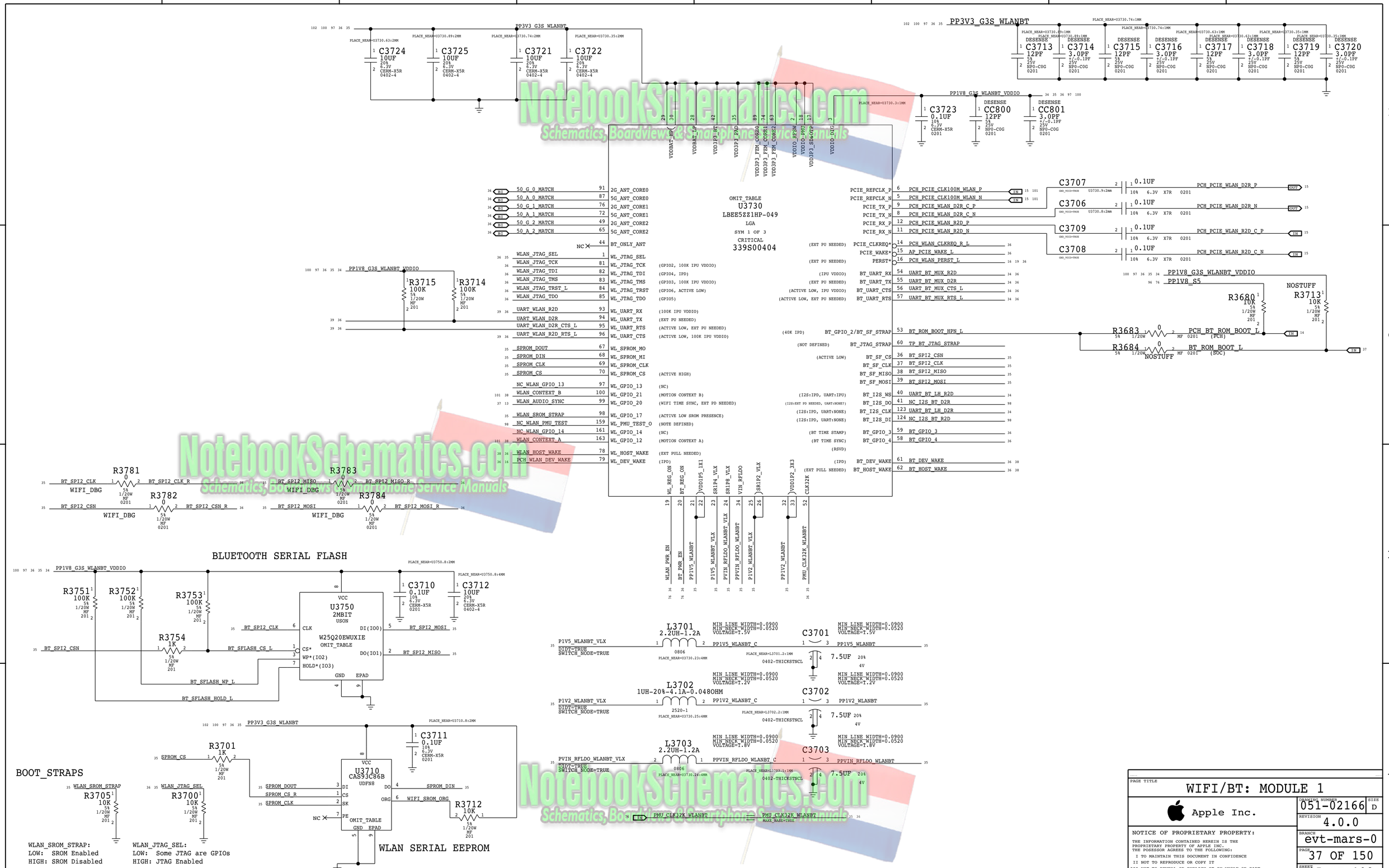
PP3V3_G3S_WLANBT
C3724 10UF 20% 6.3V CERM-X5R 0402-4
C3725 10UF 20% 6.3V CERM-X5R 0402-4
C3721 10UF 20% 6.3V CERM-X5R 0402-4
C3722 10UF 20% 6.3V CERM-X5R 0402-4
C3713 12PF 5% 25V NP0-C0G 0201
C3714 3.0PF +/-0.1PF 25V NP0-C0G 0201
C3715 12PF 5% 25V NP0-C0G 0201
C3716 3.0PF +/-0.1PF 25V NP0-C0G 0201
C3717 12PF 5% 25V NP0-C0G 0201
C3718 3.0PF +/-0.1PF 25V NP0-C0G 0201
C3719 12PF 5% 25V NP0-C0G 0201
C3720 3.0PF +/-0.1PF 25V NP0-C0G 0201
PP1V8_G3S_WLANBT_VDDIO
C3723 0.1UF 10% 6.3V CERM-X5R 0201
CC800 12PF 5% 25V NP0-C0G 0201
CC801 3.0PF +/-0.1PF 25V NP0-C0G 0201
U3730
LBEE5ZZ1HP-049
LGA
SYM 1 OF 3
CRITICAL
339S00404
OMIT_TABLE
50_G_0_MATCH
50_A_0_MATCH
50_G_1_MATCH
50_A_1_MATCH
50_G_2_MATCH
50_A_2_MATCH
2G_ANT_CORE0
5G_ANT_CORE0
2G_ANT_CORE1
5G_ANT_CORE1
2G_ANT_CORE2
5G_ANT_CORE2
BT_ONLY_ANT
WLAN_JTAG_SEL
WLAN_JTAG_TCK
WLAN_JTAG_TDI
WLAN_JTAG_TMS
WLAN_JTAG_TRST_L
WLAN_JTAG_TDO
UART_WLAN_R2D
UART_WLAN_D2R
UART_WLAN_D2R_CTS_L
UART_WLAN_R2D_RTS_L
SPROM_DOUT
SPROM_DIN
SPROM_CLK
SPROM_CS
NC_WLAN_GPIO_13
WLAN_CONTEXT_B
WLAN_AUDIO_SYNC
WLAN_SROM_STRAP
NC_WLAN_PMU_TEST
NC_WLAN_GPIO_14
WLAN_CONTEXT_A
WLAN_HOST_WAKE
PCH_WLAN_DEV_WAKE
PCIE_REFCLK_P
PCIE_REFCLK_N
PCIE_TX_P
PCIE_TX_N
PCIE_RX_P
PCIE_RX_N
PCIE_CLKREQ*
PCIE_WAKE*
PERST*
BT_UART_RX
BT_UART_TX
BT_UART_CTS
BT_UART_RTS
BT_GPIO_2/BT_SF_STRAP
BT_JTAG_STRAP
BT_SF_CS
BT_SF_CLK
BT_SF_MISO
BT_SF_MOSI
BT_I2S_WS
BT_I2S_DO
BT_I2S_CLK
BT_I2S_DI
BT_GPIO_3
BT_GPIO_4
BT_DEV_WAKE
BT_HOST_WAKE
PCH_PCIE_CLK100M_WLAN_P
PCH_PCIE_CLK100M_WLAN_N
PCH_PCIE_WLAN_D2R_C_P
PCH_PCIE_WLAN_D2R_C_N
PCH_PCIE_WLAN_R2D_P
PCH_PCIE_WLAN_R2D_N
PCH_WLAN_CLKREQ_R_L
AP_PCIE_WAKE_L
PCH_WLAN_PERST_L
UART_BT_MUX_R2D
UART_BT_MUX_D2R
UART_BT_MUX_CTS_L
UART_BT_MUX_RTS_L
BT_ROM_BOOT_HPN_L
TP_BT_JTAG_STRAP
BT_SPI2_CSN
BT_SPI2_CLK
BT_SPI2_MISO
BT_SPI2_MOSI
UART_BT_LH_R2D
NC_I2S_BT_D2R
UART_BT_LH_D2R
NC_I2S_BT_R2D
BT_GPIO_3
BT_GPIO_4
BT_DEV_WAKE
BT_HOST_WAKE
C3707 0.1UF 10% 6.3V X7R 0201
C3706 0.1UF 10% 6.3V X7R 0201
C3709 0.1UF 10% 6.3V X7R 0201
C3708 0.1UF 10% 6.3V X7R 0201
PCH_PCIE_WLAN_D2R_P
PCH_PCIE_WLAN_D2R_N
PCH_PCIE_WLAN_R2D_C_P
PCH_PCIE_WLAN_R2D_C_N
PP1V8_G3S_WLANBT_VDDIO
PP1V8_S5
R3715 100K 5% 1/20W MF 201
R3714 100K 5% 1/20W MF 201
R3680 10K 5% 1/20W MF 201
R3713 10K 5% 1/20W MF 201
NOSTUFF
R3683 0 5% 1/20W MF 0201
R3684 0 5% 1/20W MF 0201
PCH_BT_ROM_BOOT_L (PCH)
BT_ROM_BOOT_L (SOC)
R3781 0 5% 1/20W MF 0201
R3782 0 5% 1/20W MF 0201
R3783 0 5% 1/20W MF 0201
R3784 0 5% 1/20W MF 0201
WIFI_DBG
BT_SPI2_CLK_R
BT_SPI2_CSN_R
BT_SPI2_MISO_R
BT_SPI2_MOSI_R
BLUETOOTH SERIAL FLASH
PP1V8_G3S_WLANBT_VDDIO
R3751 100K 5% 1/20W MF 201
R3752 100K 5% 1/20W MF 201
R3753 100K 5% 1/20W MF 201
R3754 1K 5% 1/20W MF 201
C3710 0.1UF 10% 6.3V CERM-X5R 0201
C3712 10UF 20% 6.3V CERM-X5R 0402-4
U3750
2MBIT
USON
W25Q20EWUXIE
OMIT_TABLE
BT_SPI2_CLK
BT_SPI2_CSN
BT_SPI2_MOSI
BT_SPI2_MISO
BT_SFLASH_CS_L
BT_SFLASH_WP_L
BT_SFLASH_HOLD_L
BOOT_STRAPS
WLAN_SROM_STRAP
R3705 10K 5% 1/20W MF 201
WLAN_JTAG_SEL
R3700 10K 5% 1/20W MF 201
WLAN_SROM_STRAP:
LOW: SROM Enabled
HIGH: SROM Disabled
WLAN_JTAG_SEL:
LOW: Some JTAG are GPIOs
HIGH: JTAG Enabled
PP3V3_G3S_WLANBT
R3701 1K 5% 1/20W MF 201
C3711 0.1UF 10% 6.3V CERM-X5R 0201
U3710
CAS93C66B
UDFN8
OMIT_TABLE
SPROM_CS
SPROM_DOUT
SPROM_CS_R
SPROM_CLK
SPROM_DIN
WIFI_SROM_ORG
R3712 10K 5% 1/20W MF 201
WLAN SERIAL EEPROM
L3701 2.2UH-1.2A 0806
C3701 7.5UF 20% 4V 0402-THICKSTNCL
P1V5_WLANBT_VLX
PP1V5_WLANBT_C
PP1V5_WLANBT
L3702 1UH-20%-4.1A-0.048OHM 2520-1
C3702 7.5UF 20% 4V
P1V2_WLANBT_VLX
PP1V2_WLANBT_C
PP1V2_WLANBT
L3703 2.2UH-1.2A 0806
C3703 7.5UF 20% 4V
PVIN_RFLDO_WLANBT_VLX
PPVIN_RFLDO_WLANBT_C
PPVIN_RFLDO_WLANBT
PMU_CLK32K_WLANBT
MIN_LINE_WIDTH=0.0900
MIN_NECK_WIDTH=0.0520
VOLTAGE=1.5V
VOLTAGE=1.2V
VOLTAGE=1.8V
DIDT=TRUE
SWITCH_NODE=TRUE
MAKE_BASE=TRUE
BOM_COST_GROUP=WIRELESS
PAGE TITLE
WIFI/BT: MODULE 1
Apple Inc.
DRAWING NUMBER 051-02166
SIZE D
REVISION 4.0.0
BRANCH evt-mars-0
PAGE 37 OF 150
SHEET 35 OF 108
NOTICE OF PROPRIETARY PROPERTY:
THE INFORMATION CONTAINED HEREIN IS THE PROPRIETARY PROPERTY OF APPLE INC.
THE POSESSOR AGREES TO THE FOLLOWING:
I TO MAINTAIN THIS DOCUMENT IN CONFIDENCE
II NOT TO REPRODUCE OR COPY IT
III NOT TO REVEAL OR PUBLISH IT IN WHOLE OR PART
IV ALL RIGHTS RESERVED

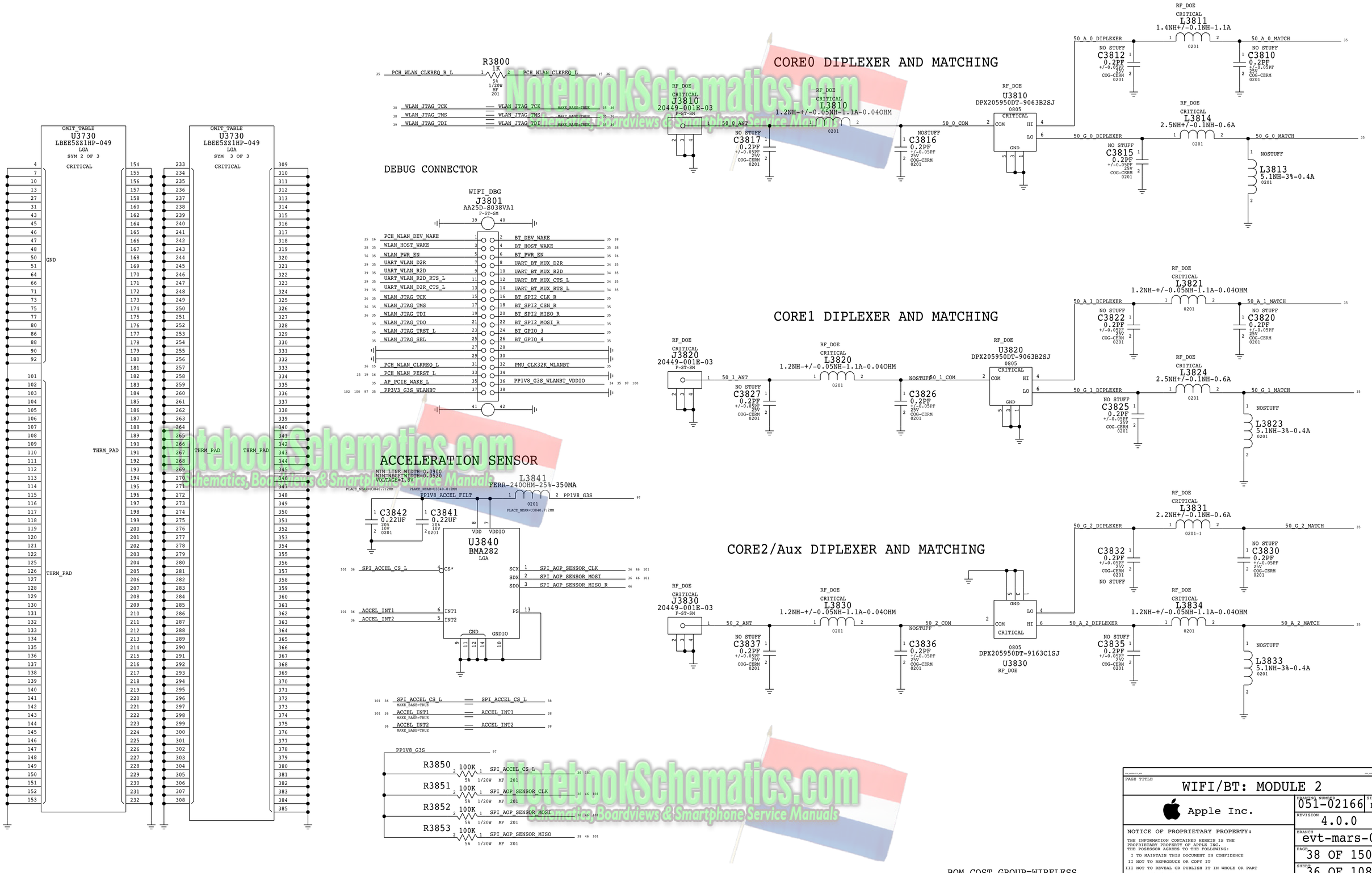
OMIT_TABLE
U3730
LBEE5ZZ1HP-049
LGA
SYM 2 OF 3
CRITICAL
OMIT_TABLE
U3730
LBEE5ZZ1HP-049
LGA
SYM 3 OF 3
CRITICAL
GND
THRM_PAD
R3800
1K
5%
1/20W
MF
201
PCH_WLAN_CLKREQ_R_L
PCH_WLAN_CLKREQ_L
WLAN_JTAG_TCK
WLAN_JTAG_TMS
WLAN_JTAG_TDI
DEBUG CONNECTOR
WIFI_DBG
J3801
AA25D-S038VA1
F-ST-SM
PCH_WLAN_DEV_WAKE
WLAN_HOST_WAKE
WLAN_PWR_EN
UART_WLAN_D2R
UART_WLAN_R2D
UART_WLAN_R2D_RTS_L
UART_WLAN_D2R_CTS_L
WLAN_JTAG_TCK
WLAN_JTAG_TMS
WLAN_JTAG_TDI
WLAN_JTAG_TDO
WLAN_JTAG_TRST_L
WLAN_JTAG_SEL
PCH_WLAN_CLKREQ_L
PCH_WLAN_PERST_L
AP_PCIE_WAKE_L
PP3V3_G3S_WLANBT
BT_DEV_WAKE
BT_HOST_WAKE
BT_PWR_EN
UART_BT_MUX_D2R
UART_BT_MUX_R2D
UART_BT_MUX_CTS_L
UART_BT_MUX_RTS_L
BT_SPI2_CLK_R
BT_SPI2_CSN_R
BT_SPI2_MISO_R
BT_SPI2_MOSI_R
BT_GPIO_3
BT_GPIO_4
PMU_CLK32K_WLANBT
PP1V8_G3S_WLANBT_VDDIO
ACCELERATION SENSOR
MIN_LINE_WIDTH=0.0900
MIN_NECK_WIDTH=0.0520
VOLTAGE=1.8V
L3841
FERR-240OHM-25%-350MA
0201
PP1V8_ACCEL_FILT
PP1V8_G3S
C3842
0.22UF
20%
10V
0201
C3841
0.22UF
20%
10V
0201
U3840
BMA282
LGA
VDD
VDDIO
CS*
INT1
INT2
GND
GNDIO
SCX
SDX
SDO
PS
SPI_ACCEL_CS_L
ACCEL_INT1
ACCEL_INT2
SPI_AOP_SENSOR_CLK
SPI_AOP_SENSOR_MOSI
SPI_AOP_SENSOR_MISO_R
R3850
R3851
R3852
R3853
100K
5%
1/20W
MF
201
SPI_AOP_SENSOR_MISO
CORE0 DIPLEXER AND MATCHING
RF_DOE
CRITICAL
J3810
20449-001E-03
F-ST-SM
50_0_ANT
NO STUFF
C3817
0.2PF
+/-0.05PF
25V
COG-CERM
0201
L3810
1.2NH-+/-0.05NH-1.1A-0.040HM
0201
50_0_COM
NOSTUFF
C3816
U3810
DPX205950DT-9063B2SJ
0805
COM
HI
LO
GND
50_A_0_DIPLEXER
50_A_0_MATCH
C3812
C3810
L3811
1.4NH+/-0.1NH-1.1A
50_G_0_DIPLEXER
50_G_0_MATCH
C3815
L3814
2.5NH+/-0.1NH-0.6A
L3813
5.1NH-3%-0.4A
CORE1 DIPLEXER AND MATCHING
J3820
20449-001E-03
50_1_ANT
C3827
L3820
1.2NH-+/-0.05NH-1.1A-0.040HM
50_1_COM
C3826
U3820
DPX205950DT-9063B2SJ
50_A_1_DIPLEXER
50_A_1_MATCH
C3822
C3820
L3821
1.2NH-+/-0.05NH-1.1A-0.040HM
50_G_1_DIPLEXER
50_G_1_MATCH
C3825
L3824
2.5NH+/-0.1NH-0.6A
L3823
5.1NH-3%-0.4A
CORE2/Aux DIPLEXER AND MATCHING
J3830
20449-001E-03
50_2_ANT
C3837
L3830
1.2NH-+/-0.05NH-1.1A-0.040HM
50_2_COM
C3836
U3830
DPX205950DT-9163C1SJ
0805
50_G_2_DIPLEXER
50_G_2_MATCH
C3832
C3830
L3831
2.2NH+/-0.1NH-0.6A
0201-1
50_A_2_DIPLEXER
50_A_2_MATCH
C3835
L3834
1.2NH-+/-0.05NH-1.1A-0.040HM
L3833
5.1NH-3%-0.4A
BOM_COST_GROUP=WIRELESS
PAGE TITLE
WIFI/BT: MODULE 2
Apple Inc.
DRAWING NUMBER
051-02166
SIZE
D
REVISION
4.0.0
BRANCH
evt-mars-0
PAGE
38 OF 150
SHEET
36 OF 108
NOTICE OF PROPRIETARY PROPERTY:
THE INFORMATION CONTAINED HEREIN IS THE PROPRIETARY PROPERTY OF APPLE INC.
THE POSESSOR AGREES TO THE FOLLOWING:
I TO MAINTAIN THIS DOCUMENT IN CONFIDENCE
II NOT TO REPRODUCE OR COPY IT
III NOT TO REVEAL OR PUBLISH IT IN WHOLE OR PART
IV ALL RIGHTS RESERVED

Note 1) IPU represents SW configured state, not HW default

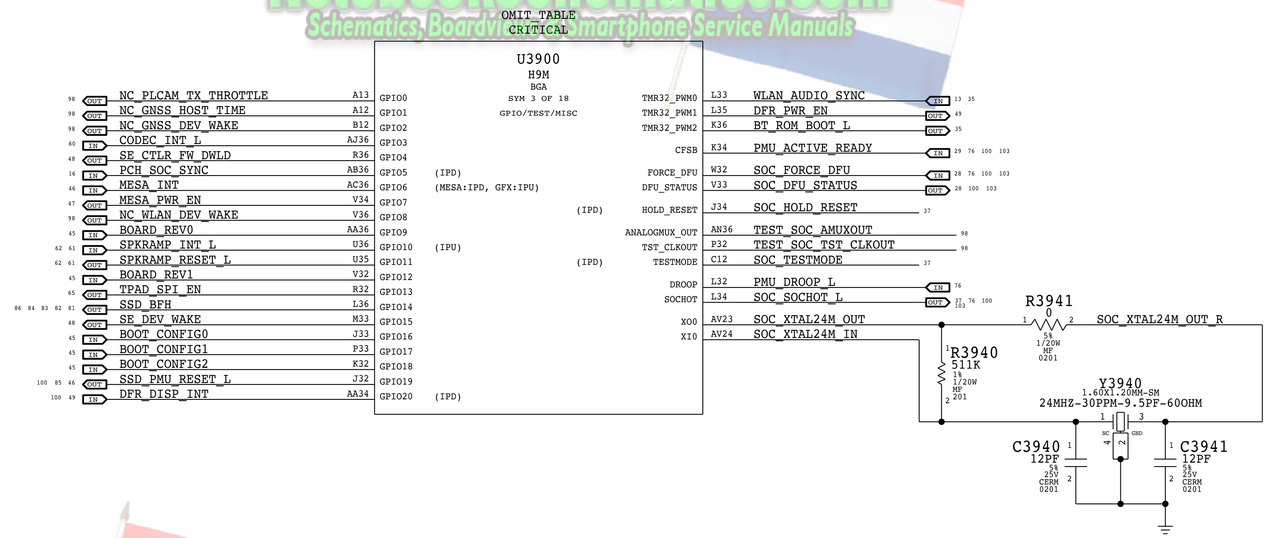

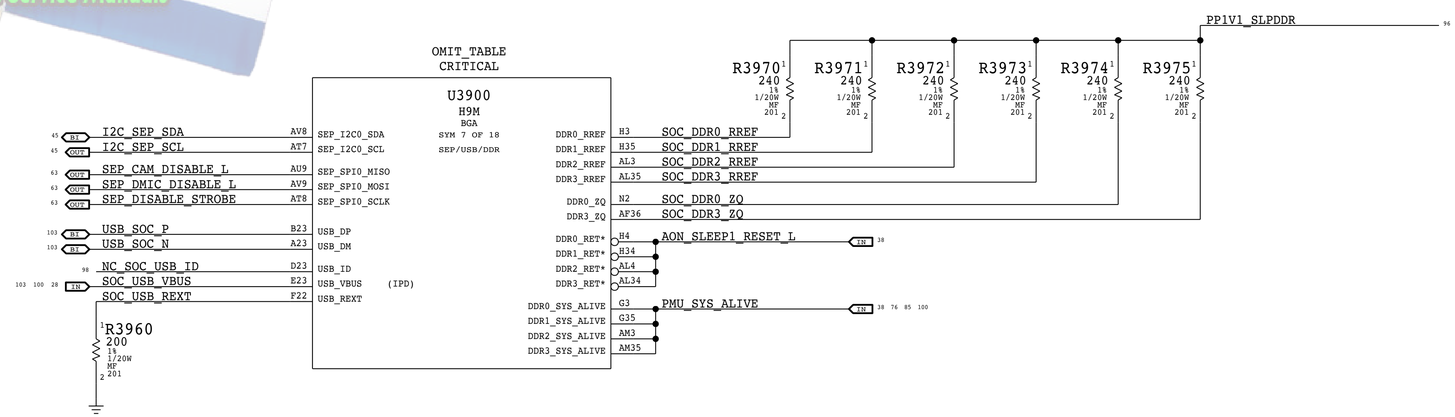

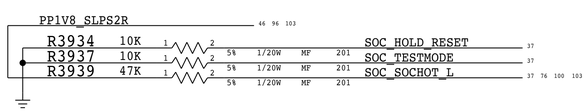

NotebookSchematics.com
Schematics, Boardviews & Smartphone Service Manuals

BOM_COST_GROUP=SOC

SYNC_MASTER=T290_BIGSUR SYNC_DATE=06/14/2017

PAGE TITLE
SoC GPIO/SEP/USB/DDR/Test

Apple Inc.

DRAWING NUMBER 051-02166
SIZE D
REVISION 4.0.0
BRANCH evt-mars-0
PAGE 39 OF 150
SHEET 37 OF 108

NOTICE OF PROPRIETARY PROPERTY:
THE INFORMATION CONTAINED HEREIN IS THE PROPRIETARY PROPERTY OF APPLE INC.
THE POSESSOR AGREES TO THE FOLLOWING:
I TO MAINTAIN THIS DOCUMENT IN CONFIDENCE
II NOT TO REPRODUCE OR COPY IT
III NOT TO REVEAL OR PUBLISH IT IN WHOLE OR PART
IV ALL RIGHTS RESERVED

OMIT_TABLE
CRITICAL

U3900
H9M
BGA
SYM 6 OF 18

WLAN_CONTEXT_A	D3	AOP_FUNC[0]		AOP_PDM_CLK0	P6	PDM_DMIC_CLK0_R	46
WLAN_CONTEXT_B	F4	AOP_FUNC[1]		AOP_PDM_CLK1	K2	PDM_DMIC_CLK1_R	46
ACCEL_INT1	M6	AOP_FUNC[2]	(IPD)	AOP_PDM_CLK2 (IPU)	J6	TP_SMC_FIXTURE_MODE_L	98 100
ACCEL_INT2	D4	AOP_FUNC[3]	(IPD)	AOP_PDM_CLK3 (IPU)	L6	NC_PLCAM_PROX_INT_L	98
BTUARTMUX_SEL_PCH	F3	AOP_FUNC[4]		AOP_PDM_CLK4 (IPU)	L5	NC_PLCAM_ROMEO_B2B_DETECT	98
SOC_PERST_L	K6	AOP_FUNC[5]					
NC_ALTIMETER_INT	E4	AOP_FUNC[6]	(IPD)	AOP_PDM_DATA0 (IPD)	J5	PDM_DMIC_DATA0	63
SPI_ACCEL_CS_L	J3	AOP_FUNC[7]		AOP_PDM_DATA1 (IPD)	K4	PDM_DMIC_DATA1	63
NC_SPI_ALTIMETER_CS_L	H6	AOP_FUNC[8]		AOP_SPI_MOSI	D2	SPI_AOP_SENSOR_MOSI_R	46
NC_I2C_AOP_SCL	N6	AOP_I2C0_SCL		AOP_SPI_SCLK	F2	SPI_AOP_SENSOR_CLK_R	46
NC_I2C_AOP_SDA	G5	AOP_I2C0_SDA		AOP_SPI_MISO	E2	SPI_AOP_SENSOR_MISO	36 46 101

OMIT_TABLE
CRITICAL

U3900
H9M
BGA
SYM 5 OF 18

DFR_TOUCH_INT_L	AL6	AON_GPIO0		JTAG_TCK (IPU)	AK6	SWD_SOC_SWCLK	19 100 103
CPU_SMC_THRMTRIP_L	AE6	AON_GPIO1 (IPU)	AON	JTAG_TMS (IPU)	AN5	SWD_SOC_SWDIO	19 100 103
NC_SMC_GFX_SELF_THROTTLE	AT5	AON_GPIO2 (IPD)		JTAG_TDI (IPU)	AH6	DEBUG_JTAG_SOC_TDI	100 103
NC_SMC_TOPBLK_SWP_L	AN4	AON_GPIO3		JTAG_TDO	AP4	DEBUG_JTAG_SOC_TDO	100 103
XDP_PRESENT_L	AK4	AON_GPIO4		JTAG_TRST* (IPD)	AJ6	TP_JTAG_SOC_TRST_L	100
CODEC_RESET_L	AV5	AON_GPIO5		JTAG_SEL	AC6	SOC_JTAG_SEL (DAP=0, TAP=1)	38
BT_DEV_WAKE	AR3	AON_GPIO6					
NC_PCIEDN_WAKE_L	AG6	AON_GPIO7 (IPU)		DOCK_CONNECT	AN2	SOC_DOCK_CONNECT	29 30 38 100
NC_ENET_LOW_PWR	AU5	AON_GPIO8		AON_SWD0_TMS	AJ4	WLAN_JTAG_TMS	36
TPAD_SPI_INT_L	AP2	AON_GPIO9		AON_SWD1_TMS (IPU)	AH4	NC_MESA_MENUKEY_L	98
NC_SDCONN_STATE_CHANGE_L	AR4	AON_GPIO10 (IPU)		AON_SWD01_TCK	AJ2	WLAN_JTAG_TCK	36
NC_ENET_MEDIA_SENSE	AN3	AON_GPIO11 (IPD)		WDOG	AJ5	SOC_WDOG	76 100
PMU_INT_L	AT6	AON_GPIO12 (IPU)		AON_SLEEP1_RESET*	AF6	AON_SLEEP1_RESET_L	37
SPMI_CLK (R4036 20, PLACE_NEAR=U3900.AD6:5MM)	AD6	AON_SPMI_SCLK					
SPMI_DATA (R4037 20, PLACE_NEAR=U7800.M7:5MM)	AR2	AON_SPMI_SDATA					
PMU_CLK32K_SOC	AR5	RT_CLK32768					
SOC_COLD_RESET_L (R4039 4.7K)	AK2	COLD_RESET*					
PMU_COLD_RESET_L	AK3	CFSB_AON					

OMIT_TABLE
CRITICAL

U3900
H9M
BGA
SYM 9 OF 18

ESPI_IO<0> (R4050 20, PLACE_NEAR=U3900.U2:5MM)	V2	SMC_ESPI_IO0		SMC_GPIO0	Y4	CODEC_WAKE_L	60
ESPI_IO<1> (R4051 20, PLACE_NEAR=U3900.V2:5MM)	U3	SMC_ESPI_IO1		SMC_GPIO1 (IPD)	Y8	BT_HOST_WAKE	35 36
ESPI_IO<2> (R4052 20, PLACE_NEAR=U3900.U3:5MM)	U4	SMC_ESPI_IO2		SMC_GPIO2 (IPD)	Y5	WLAN_HOST_WAKE	35 36
ESPI_IO<3> (R4053 20, PLACE_NEAR=U3900.V4:5MM)	V8	SMC_ESPI_IO3		SMC_GPIO3	AA2	DP_INT_HPD_MASK	46
ESPI_CLK60M	U2	SMC_ESPI_CLK	(IPD)	SMC_GPIO4	Y7	LID_OPEN_RIGHT	46
ESPI_CS_L	V7	SMC_ESPI_CS*		SMC_GPIO5 (IPD)	Y6	NC_PCC_EVENT	98
ESPI_RESET_L	V6	SMC_ESPI_RESET*	(IPD)	SMC_GPIO6	AB2	NC_TPAD_VIBE_L	98
SMC_PECI_RX	M5	SMC_PECI_IN	(IPD)	SMC_GPIO7	AD5	TPAD_KBD_WAKE_L	46
SMC_PECI_TX	T6	SMC_PECI_OUT		SMC_GPIO8	AD2	LID_OPEN_LEFT	46
				SMC_GPIO9	AB4	NC_SPI_DESCRIPTOR_OVERRIDE_L	98
SMC_PCH_PWROK	W7	PCH_PWROK		SMC_GPIO10 (IPU)	AC2	NC_DISP_GCON_INT_L	98
SMC_PCH_SYS_PWROK	W8	SYS_PWROK		SMC_GPIO11	AC3	NC_SOC_PCH_GCON_INT_L	98
SMC_RSMRST_L	W6	RSMRST*		SMC_GPIO12	AA8	TPAD_ACTUATOR_DISABLE_L	46
SMC_SYSRST_L	W4	SYS_RESET*		SMC_GPIO13 (IPU)	AB3	TBT_WAKE_L	90
PM_SLP_S0_L	AA4	SLP_S0B		SMC_GPIO14 (IPU)	AE2	UPC_I2C_INT_L	28 50 90
SMC_PROCHOT_L	R5	PROCHOT*		SMC_GPIO15 (IPD)	L4	DP_INT_HPD_L	46
PMU_SYS_ALIVE	AA6	SYS_ALIVE		SMC_ADC0	AG2	SMC_CPU_HS_ISENSE	58
				SMC_ADC1	AC4	SMC_PBUS_VSENSE	58
I2C_UPC_SCL	M3	SMC_I2C0_SCL		SMC_ADC2	AH3	SMC_BMON_ISENSE	58
I2C_UPC_SDA	J4	SMC_I2C0_SDA		SMC_ADC3	AD4	SMC_DCIN_ISENSE	58
				SMC_ADC4	AB6	SMC_DCIN_VSENSE	58
I2C_SNS0_S0_SCL	N4	SMC_I2C1_SCL		SMC_ADC5	AH2	SMC_PP3V3_WLANBT_ISENSE	58
I2C_SNS0_S0_SDA	P4	SMC_I2C1_SDA		SMC_ADC6	AG4	SMC_PP1V8_WLANBT_ISENSE	58
				SMC_ADC7	AC5	SMC_CALPE_ISENSE	58
I2C_SNS1_S0_SCL	U5	SMC_I2C2_SCL		REFP_ADC	AF4	PP1V25_SLPS2R_SMC_AVREF	45
I2C_SNS1_S0_SDA	M2	SMC_I2C2_SDA		REFM_ADC	AG3	GND_SMC_AVSS (PLACE_NEAR=U3900.AF3:4MM)	
I2C_DISP_SCL	U6	SMC_I2C3_SCL		SMC_PWM0	J2	SMC_FAN_0_PWM	58
I2C_DISP_SDA	R4	SMC_I2C3_SDA		SMC_TACH0	L3	SMC_FAN_0_TACH	58
I2C_PWR_SCL	P3	SMC_I2C4_SCL		SMC_PWM1	R6	SMC_FAN_1_PWM	58
I2C_PWR_SDA	T4	SMC_I2C4_SDA		SMC_TACH1	L2	SMC_FAN_1_TACH	58
I2C_SNS_G3S_SCL	R2	SMC_I2C5_SCL		SMC_PWM2	M4	NC_SMC_LED_ONEWIRE	98
I2C_SNS_G3S_SDA	P2	SMC_I2C5_SDA					
I2C_SSD_SCL	R3	SMC_I2C6_SCL	(IPU)	SMC_UART0_RXD	V4	SMC_DEBUGPRT_RX	90 100 103
I2C_SSD_SDA	T2	SMC_I2C6_SDA		SMC_UART0_TXD	V5	SMC_DEBUGPRT_TX	90 100 103
				SWD_OUT0_TCK	AE3	SSD0_SWCLK	46 81 82 83 84 86
				SWD_OUT0_TMS	AA5	SSD0_SWDIO	46 81 82 83 84 86
				SWD_OUT1_TCK	AF2	NC_SSD1_SWCLK_UART_R2D	98
				SWD_OUT1_TMS	AA7	NC_SSD1_SWDIO_UART_D2R	98

XW4089
SM
1 2

PP1V8_S5 (13 14 15 16 96)

R4046	10K	SOC_JTAG_SEL	38
R4047	100K	SOC_DOCK_CONNECT	29 30 38 100
R4054	100K	ESPI_IO<0>	13 19 38
R4055	100K	ESPI_IO<1>	13 19 38
R4056	100K	ESPI_IO<2>	13 19 38
R4057	100K	ESPI_IO<3>	13 19 38
R4059	100K	ESPI_CS_L	13 19 38

BOM_COST_GROUP=SOC

SYNC_MASTER=T290_BIGSUR SYNC_DATE=06/14/2017

PAGE TITLE
SoC AOP/AON/SMC

Apple Inc.

DRAWING NUMBER 051-02166 SIZE D
REVISION 4.0.0
BRANCH evt-mars-0
PAGE 40 OF 150
SHEET 38 OF 108

NOTICE OF PROPRIETARY PROPERTY:
THE INFORMATION CONTAINED HEREIN IS THE PROPRIETARY PROPERTY OF APPLE INC.
THE POSESSOR AGREES TO THE FOLLOWING:
I TO MAINTAIN THIS DOCUMENT IN CONFIDENCE
II NOT TO REPRODUCE OR COPY IT
III NOT TO REVEAL OR PUBLISH IT IN WHOLE OR PART
IV ALL RIGHTS RESERVED

NotebookSchematics.com
Schematics, Boardviews & Smartphone Service Manuals

OMIT_TABLE
CRITICAL

U3900
H9M
BGA
SYM 4 OF 18
ISP

101 80	IN	MIPI_FTCAM_DATA_P<0>	B27	MIPI0C_DATA0_P			
101 80	IN	MIPI_FTCAM_DATA_N<0>	A27	MIPI0C_DATA0_N			
98	IN	GND	B25	MIPI0C_DATA1_P			
98	IN	GND	A25	MIPI0C_DATA1_N			
101 80	IN	MIPI_FTCAM_CLK_P	B26	MIPI0C_CLK_P			
101 80	IN	MIPI_FTCAM_CLK_N	A26	MIPI0C_CLK_N			
98	IN	GND	B28	MIPI1C_DATA0_P			
98	IN	GND	A28	MIPI1C_DATA0_N			
98	IN	GND	B30	MIPI1C_DATA1_P			
98	IN	GND	A30	MIPI1C_DATA1_N			
98	IN	GND	B29	MIPI1C_CLK_P			
98	IN	GND	A29	MIPI1C_CLK_N			
49	OUT	MIPI_DFR_DATA_P	B33	MIPID_DATA0_P			
49	OUT	MIPI_DFR_DATA_N	A33	MIPID_DATA0_N			
49	OUT	MIPI_DFR_CLK_P	B32	MIPID_CLK_P			
49	OUT	MIPI_DFR_CLK_N	A32	MIPID_CLK_N			
		SOC_MIPI0C_REXT	F23	MIPI0C_REXT			
		SOC_MIPI1C_REXT	F26	MIPI1C_REXT			
		SOC_MIPID_REXT	F27	MIPID_REXT			
						ISP_I2C0_SDA	AF32	I2C_FTCAM_SDA	BI 51
						ISP_I2C0_SCL	AH36	I2C_FTCAM_SCL	OUT 51
						ISP_I2C1_SDA	AB32	NC_I2C_PLCAM_SDA	BI 51
						ISP_I2C1_SCL	AG32	NC_I2C_PLCAM_SCL	OUT 51
						SENSOR0_CLK	AK35	NC_FTCAM_CLK12M_R	OUT 98
						SENSOR0_RST	AK34	NC_FTCAM_RESET_L	OUT 98
						SENSOR0_ISTRB	AJ33	DFR_TOUCH_RESET_L	OUT 49 100
						SENSOR1_CLK	AD33	NC_PLCAM_RX_CLK12M_R	OUT 98
						SENSOR1_RST	AC32	NC_PLCAM_RX_RESET_L	OUT 98
						SENSOR1_ISTRB	AC34	DFR_DISP_RESET_L	OUT 49 100
						SENSOR2_CLK	AD32	NC_PLCAM_TX_CLK12M_R	OUT 98
						SENSOR2_RST	AJ32	NC_PLCAM_TX_RESET_L	OUT 98
					(IPD)	SENSOR_INT	AA33	NC_PLCAM_TX_INT	IN 98
					(IPD)	DISP_TE	H32	DFR_DISP_TE	IN 49 100
						DISP_VSYNC	T36	BOARD_REV2	IN 45
						CLK32K_OUT	AK33	DFR_TOUCH_CLK32K_RESET_L	OUT 49 100

R4100 4.02K 1% 1/20W MF 201
R4101 4.02K 1% 1/20W MF 201
R4102 4.02K 1% 1/20W MF 201

OMIT_TABLE
CRITICAL

U3900
H9M
BGA
SYM 2 OF 18
I2C/UART/SPI/I2S

51	BI	I2C_SPKRAMP_L_SDA	AE35	I2C0_SDA			
51	OUT	I2C_SPKRAMP_L_SCL	AD35	I2C0_SCL			
51	BI	I2C_SPKRAMP_R_SDA	AF34	I2C1_SDA			
51	OUT	I2C_SPKRAMP_R_SCL	AG35	I2C1_SCL			
51	BI	I2C_CODEC_SDA	M34	I2C2_SDA			
51	OUT	I2C_CODEC_SCL	R33	I2C2_SCL			
51	BI	I2C_ALS_SDA	Y32	I2C3_SDA			
51	OUT	I2C_ALS_SCL	AE34	I2C3_SCL			
51	BI	I2C_DFR_SDA	T34	I2C4_SDA			
51	OUT	I2C_DFR_SCL	U32	I2C4_SCL			
51	BI	NC_I2C_SOC_5_SDA	R35	I2C5_SDA			
51	OUT	NC_I2C_SOC_5_SCL	U33	I2C5_SCL			
100 62	IN	SPKR_ID1	P34	I2C6_SDA	(IPU)		
100 61	IN	SPKR_ID0	R34	I2C6_SCL	(IPU)		
103 100 98	IN	TP_SOC_DEBUGPRT_RX	Y33	UART0_RXD	(IPU)		
103 100 98	OUT	TP_SOC_DEBUGPRT_TX	Y34	UART0_TXD			
48	IN	UART_SE_D2R	B15	UART1_RXD			
48	OUT	UART_SE_R2D	A15	UART1_TXD			
48	IN	UART_SE_D2R_CTS_L	C15	UART1_CTS*			
48	OUT	UART_SE_R2D_RTS_L	D15	UART1_RTS*			
34	IN	UART_BT_D2R	J36	UART2_RXD			
34	OUT	UART_BT_R2D	J35	UART2_TXD			
34	IN	UART_BT_D2R_CTS_L	N32	UART2_CTS*			
34	OUT	UART_BT_R2D_RTS_L	M32	UART2_RTS*			
34	IN	UART_BT_LH_D2R	M36	UART3_RXD			
34	OUT	UART_BT_LH_R2D	N36	UART3_TXD			
98	IN	NC_UART_GNSS_D2R_CTS_L	M35	UART3_CTS*			
98	OUT	NC_UART_GNSS_R2D_RTS_L	U34	UART3_RTS*			
36 35	IN	UART_WLAN_D2R	B14	UART4_RXD			
36 35	OUT	UART_WLAN_R2D	A14	UART4_TXD			
36 35	IN	UART_WLAN_D2R_CTS_L	C14	UART4_CTS*			
36 35	OUT	UART_WLAN_R2D_RTS_L	C13	UART4_RTS*			
						SPI0_MISO	AR9	SPI_SOCROM_MISO	IN 45
						SPI0_MOSI	AR7	SPI_SOCROM_MOSI_R	
						SPI0_SCLK	AU7	SPI_SOCROM_CLK_R	
						SPI0_SSIN	AT9	SPI_SOCROM_CS_L	OUT 45
					(IPU)	SPI1_MISO	P36	SPI_TPAD_MISO	IN 45 46
						SPI1_MOSI	N34	SPI_TPAD_MOSI_R	OUT 46
						SPI1_SCLK	P35	SPI_TPAD_CLK_R	OUT 46
						SPI1_SSIN	T32	SPI_TPAD_CS_L	OUT 45
						SPI2_MISO	A19	SPI_MESA_MISO	IN 47
						SPI2_MOSI	A20	SPI_MESA_MOSI_R	OUT 46
						SPI2_SCLK	C19	SPI_MESA_CLK_R	OUT 46
						SPI2_SSIN	A18	WLAN_JTAG_TDI	OUT 46
						SPI3_MISO	C17	SPI_DFR_MISO	IN 46
						SPI3_MOSI	C18	SPI_DFR_MOSI_R	OUT 46
						SPI3_SCLK	B18	SPI_DFR_CLK_R	OUT 46
						SPI3_SSIN	A17	SPI_DFR_CS_L	OUT 49 100
					(IPD)	I2S0_DIN	AC33	I2S_SPKRAMP_L_D2R	IN 61 62
						I2S0_DOUT	AG34	I2S_SPKRAMP_L_R2D_R	OUT 46
						I2S0_BCLK	AA32	I2S_SPKRAMP_L_BCLK_R	OUT 46
						I2S0_LRCK	AG33	I2S_SPKRAMP_L_LRCLK	OUT 46
						I2S0_MCK	AR35	NC_DFR_TOUCH_RSVD	BI 98
					(IPD)	I2S1_DIN	B20	I2S_SPKRAMP_R_D2R	IN 46
						I2S1_DOUT	C20	I2S_SPKRAMP_R_R2D_R	OUT 46
						I2S1_BCLK	C21	I2S_SPKRAMP_R_BCLK_R	OUT 46
						I2S1_LRCK	A21	I2S_SPKRAMP_R_LRCLK	OUT 46
						I2S1_MCK	D21	NC_PCHROM_SW_EN	98
					(IPD)	I2S2_DIN	AH34	I2S_CODEC_D2R	IN 60
						I2S2_DOUT	AB34	I2S_CODEC_R2D_R	OUT 46
						I2S2_BCLK	AF33	I2S_CODEC_BCLK_R	OUT 46
						I2S2_LRCK	AH35	I2S_CODEC_LRCLK	OUT 46
						I2S2_MCK	AR33	NC_I2S_CODEC_MCLK	OUT 98
					(IPD)	I2S3_DIN	AD36	NC_I2S_HAWKING_D2R	IN 98
						I2S3_DOUT	AB35	NC_I2S_CODEC1_R2D_R	OUT 98
						I2S3_BCLK	AE36	NC_I2S_HAWKING_BCLK_R	OUT 98
						I2S3_LRCK	W34	NC_I2S_HAWKING_LRCLK	OUT 98
						I2S3_MCK	AG36	NC_I2S_CODEC1_MCLK	OUT 98

PLACE_NEAR=U3900.AR7:5MM
PLACE_NEAR=U3900.AU7:5MM

R4171 20 1 2 5% 1/20W MF 201 SPI_SOCROM_MOSI OUT 45
R4172 20 1 2 5% 1/20W MF 201 SPI_SOCROM_CLK OUT 45

BOM_COST_GROUP=SOC

SYNC_MASTER=T290_BIGSUR SYNC_DATE=05/26/2017

PAGE TITLE
SoC ISP/I2C/UART/SPI/I2S

Apple Inc.

DRAWING NUMBER 051-02166 SIZE D
REVISION 4.0.0
BRANCH evt-mars-0
PAGE 41 OF 150
SHEET 39 OF 108

NOTICE OF PROPRIETARY PROPERTY:
THE INFORMATION CONTAINED HEREIN IS THE PROPRIETARY PROPERTY OF APPLE INC.
THE POSESSOR AGREES TO THE FOLLOWING:
I TO MAINTAIN THIS DOCUMENT IN CONFIDENCE
II NOT TO REPRODUCE OR COPY IT
III NOT TO REVEAL OR PUBLISH IT IN WHOLE OR PART
IV ALL RIGHTS RESERVED

NotebookSchematics.com
Schematics, Boardviews & Smartphone Service Manuals

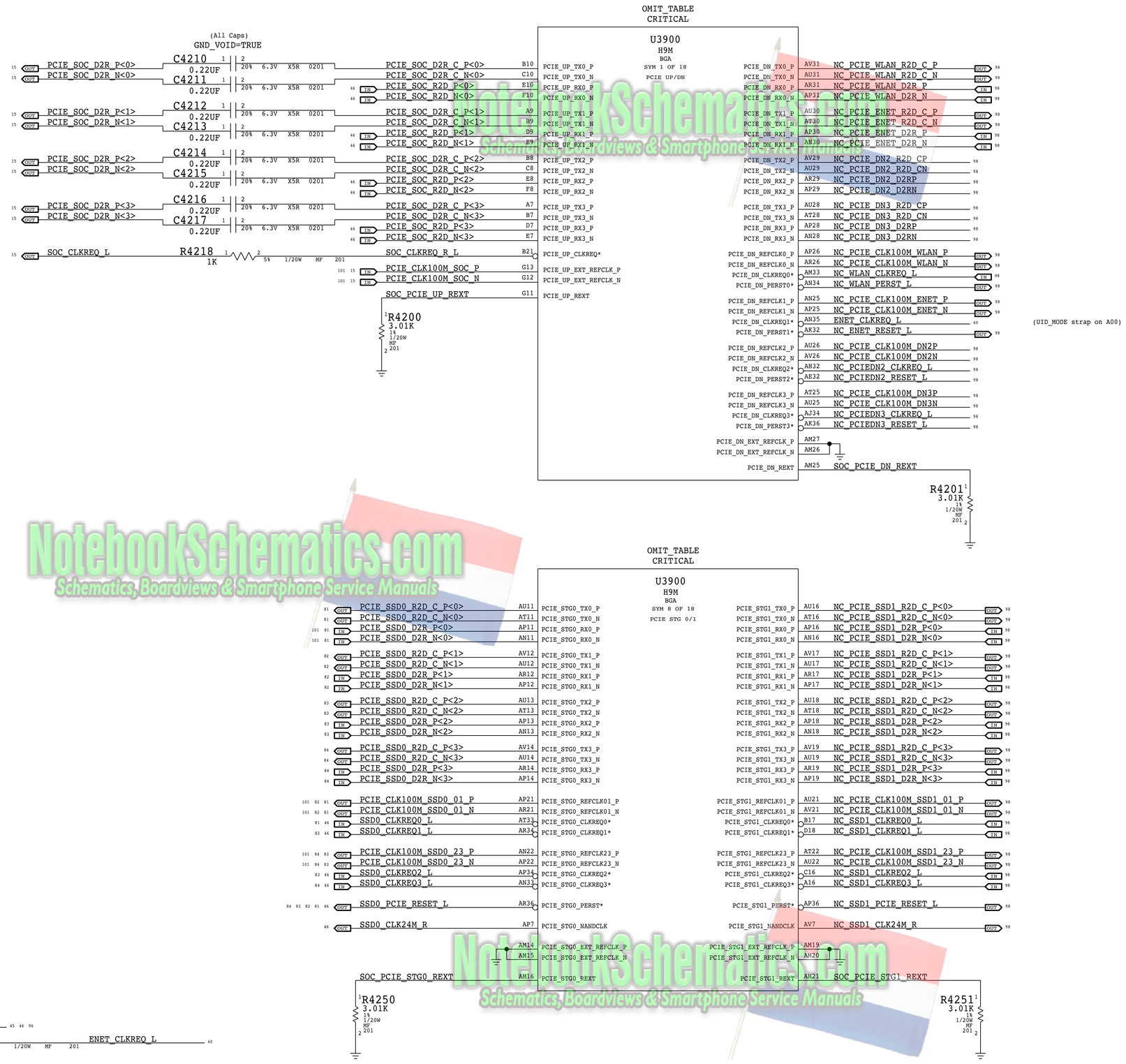

NotebookSchematics.com
Schematics, Boardviews & Smartphone Service Manuals

BOM_COST_GROUP=SOC

SYNC_MASTER=T290_BIGSUR	SYNC_DATE=03/15/2017
PAGE TITLE	SoC PCIe
Apple Inc.	DRAWING NUMBER 051-02166 · SIZE D
	REVISION 4.0.0
NOTICE OF PROPRIETARY PROPERTY: THE INFORMATION CONTAINED HEREIN IS THE PROPRIETARY PROPERTY OF APPLE INC. THE POSESSOR AGREES TO THE FOLLOWING: I TO MAINTAIN THIS DOCUMENT IN CONFIDENCE II NOT TO REPRODUCE OR COPY IT III NOT TO REVEAL OR PUBLISH IT IN WHOLE OR PART IV ALL RIGHTS RESERVED	BRANCH evt-mars-0
	PAGE 42 OF 150
	SHEET 40 OF 108

Current estimates @ 105C & 2GB from Gibraltar Power Specification Rev 0.5.3

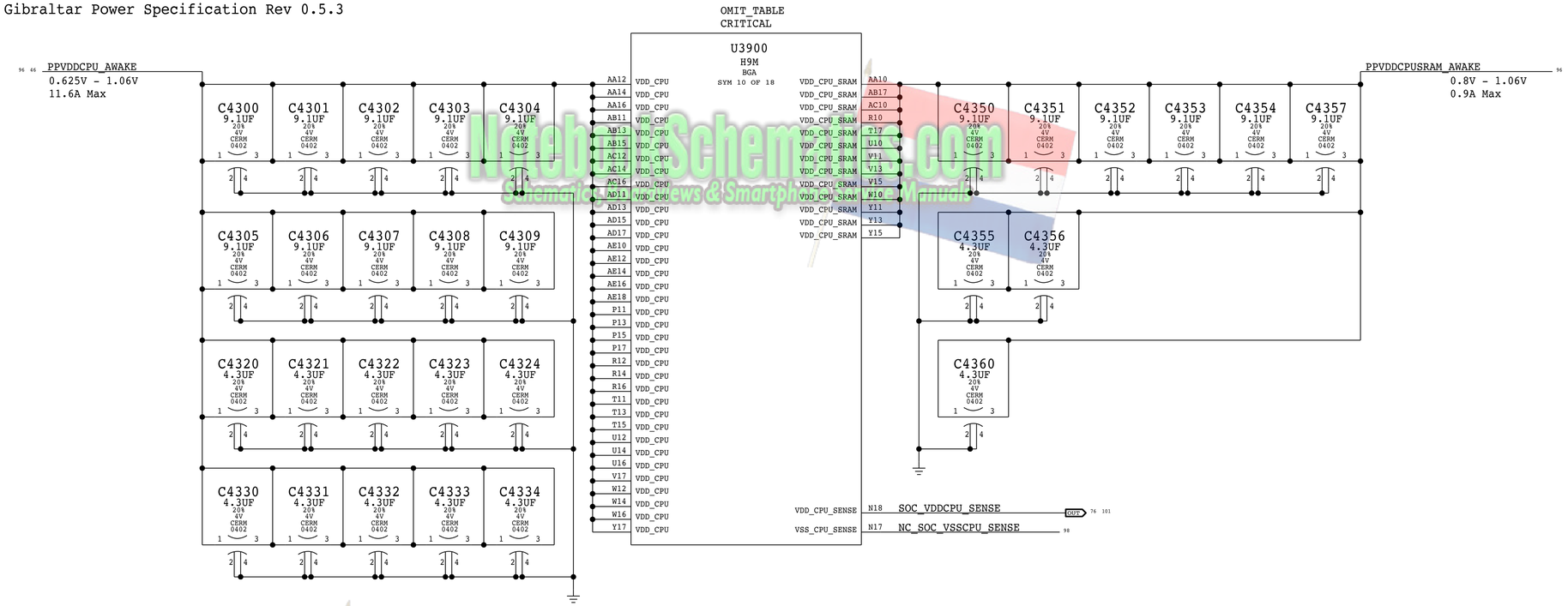

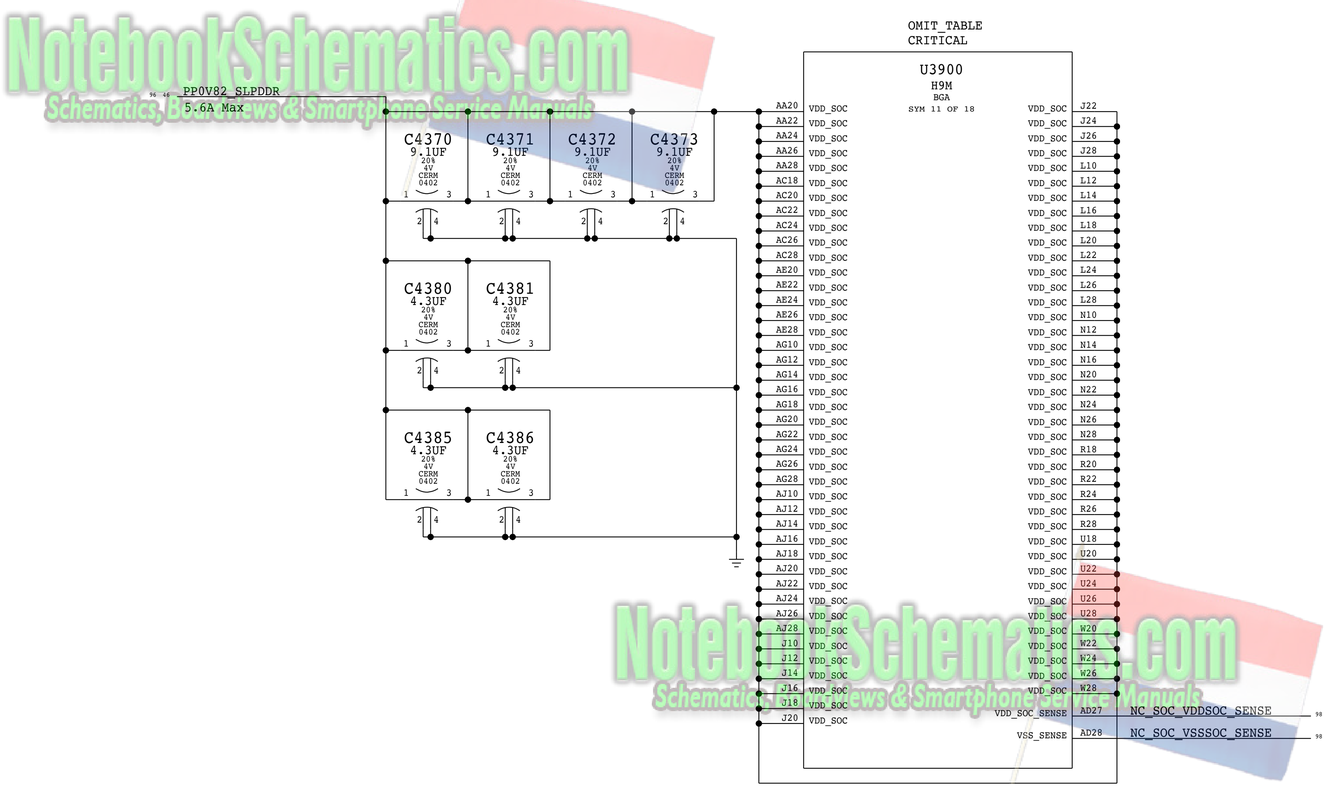

NotebookSchematics.com
Schematics, Bios, News & Smartphone Service Manuals

BOM_COST_GROUP=SOC

SYNC_MASTER=T290_BIGSUR SYNC_DATE=03/29/2017

PAGE TITLE
SoC Power 1

Apple Inc.

DRAWING NUMBER 051-02166 SIZE D
REVISION 4.0.0
BRANCH evt-mars-0
PAGE 43 OF 150
SHEET 41 OF 108

NOTICE OF PROPRIETARY PROPERTY:
THE INFORMATION CONTAINED HEREIN IS THE PROPRIETARY PROPERTY OF APPLE INC.
THE POSESSOR AGREES TO THE FOLLOWING:
I TO MAINTAIN THIS DOCUMENT IN CONFIDENCE
II NOT TO REPRODUCE OR COPY IT
III NOT TO REVEAL OR PUBLISH IT IN WHOLE OR PART
IV ALL RIGHTS RESERVED

Current estimates @ 105C & 2GB from Gibraltar Power Specification Rev 0.5.3

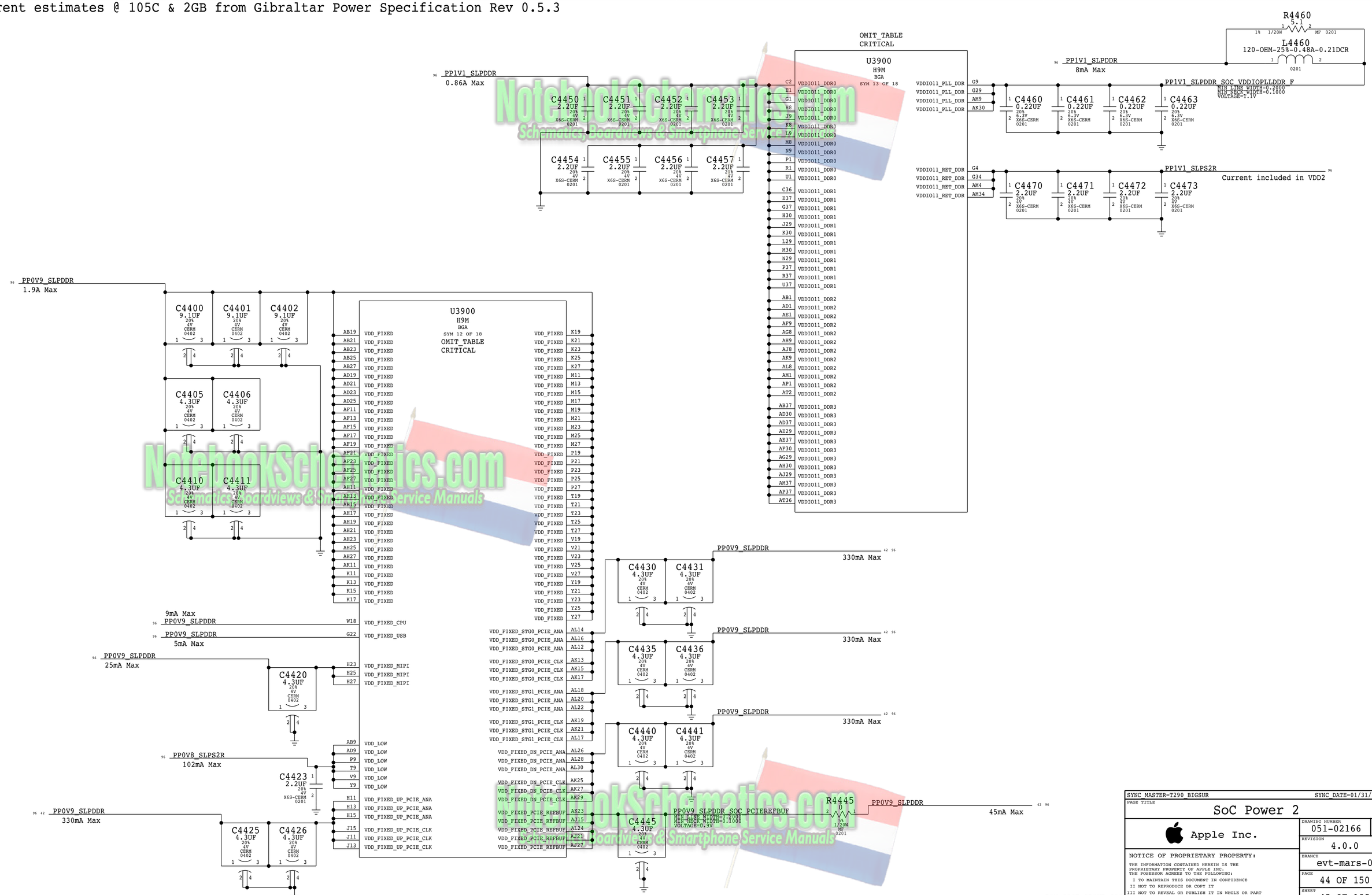

BOM_COST_GROUP=SOC

SYNC_MASTER=T290_BIGSUR	SYNC_DATE=01/31/2017
PAGE TITLE: SoC Power 2	
Apple Inc.	DRAWING NUMBER: 051-02166 / SIZE: D
	REVISION: 4.0.0
NOTICE OF PROPRIETARY PROPERTY: THE INFORMATION CONTAINED HEREIN IS THE PROPRIETARY PROPERTY OF APPLE INC. THE POSESSOR AGREES TO THE FOLLOWING: I TO MAINTAIN THIS DOCUMENT IN CONFIDENCE II NOT TO REPRODUCE OR COPY IT III NOT TO REVEAL OR PUBLISH IT IN WHOLE OR PART IV ALL RIGHTS RESERVED	BRANCH: evt-mars-0
	PAGE: 44 OF 150
	SHEET: 42 OF 108

NotebookSchematics.com
Schematics, Boardviews & Smartphone Service Manuals

Current estimates @ 105C & 2GB from Gibraltar Power Specification Rev 0.5.3

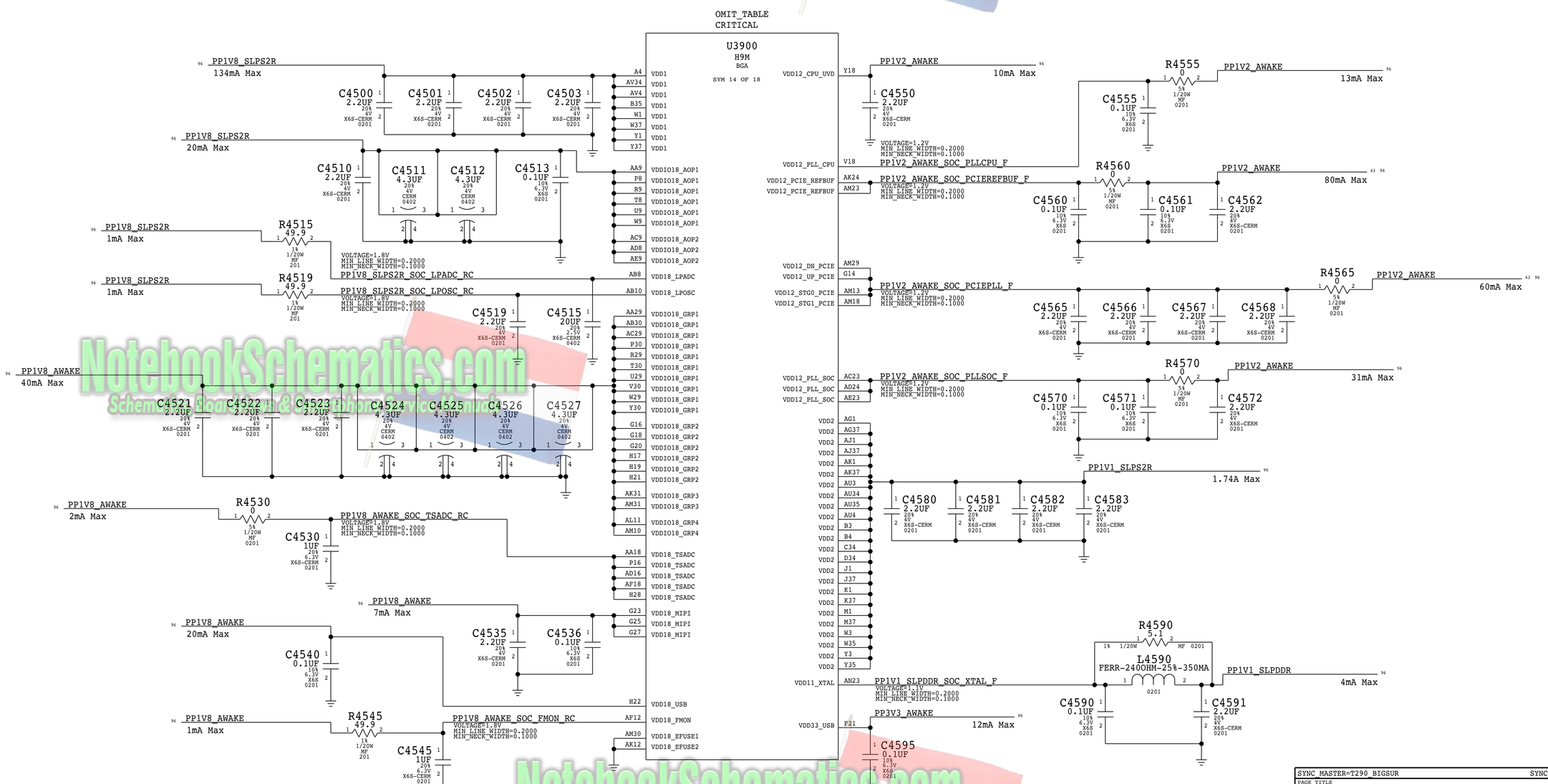

BOM_COST_GROUP=SOC

SYNC_MASTER=T290_BIGSUR SYNC_DATE=08/15/2017

PAGE TITLE

SoC Power 3

Apple Inc.

DRAWING NUMBER 051-02166 SIZE D

REVISION 4.0.0

BRANCH evt-mars-0

PAGE 45 OF 150

SHEET 43 OF 108

NOTICE OF PROPRIETARY PROPERTY:
THE INFORMATION CONTAINED HEREIN IS THE PROPRIETARY PROPERTY OF APPLE INC.
THE POSESSOR AGREES TO THE FOLLOWING:
I TO MAINTAIN THIS DOCUMENT IN CONFIDENCE
II NOT TO REPRODUCE OR COPY IT
III NOT TO REVEAL OR PUBLISH IT IN WHOLE OR PART
IV ALL RIGHTS RESERVED

U3900 H9M BGA SYM 15 OF 18

OMIT_TABLE
CRITICAL

A1	VSS	VSS	AE4
A10	VSS	VSS	AE5
A11	VSS	VSS	AE7
A2	VSS	VSS	AE8
A22	VSS	VSS	AF1
A24	VSS	VSS	AF10
A3	VSS	VSS	AF14
A31	VSS	VSS	AF16
A34	VSS	VSS	AF20
A35	VSS	VSS	AF22
A36	VSS	VSS	AF24
A37	VSS	VSS	AF26
A5	VSS	VSS	AF28
A6	VSS	VSS	AF29
A8	VSS	VSS	AF3
AA1	VSS	VSS	AF31
AA11	VSS	VSS	AF35
AA13	VSS	VSS	AF37
AA15	VSS	VSS	AF5
AA17	VSS	VSS	AF7
AA19	VSS	VSS	AF8
AA21	VSS	VSS	AG11
AA23	VSS	VSS	AG13
AA25	VSS	VSS	AG15
AA27	VSS	VSS	AG17
AA3	VSS	VSS	AG19
AA30	VSS	VSS	AG21
AA31	VSS	VSS	AG23
AA35	VSS	VSS	AG25
AA37	VSS	VSS	AG27
AB12	VSS	VSS	AG30
AB14	VSS	VSS	AG31
AB16	VSS	VSS	AG5
AB18	VSS	VSS	AG7
AB20	VSS	VSS	AG9
AB22	VSS	VSS	AH1
AB24	VSS	VSS	AH10
AB26	VSS	VSS	AH12
AB28	VSS	VSS	AH14
AB29	VSS	VSS	AH16
AB31	VSS	VSS	AH18
AB33	VSS	VSS	AH20
AB5	VSS	VSS	AH22
AB7	VSS	VSS	AH24
AC1	VSS	VSS	AH26
AC11	VSS	VSS	AH28
AC13	VSS	VSS	AH29
AC15	VSS	VSS	AH31
AC17	VSS	VSS	AH33
AC19	VSS	VSS	AH37
AC21	VSS	VSS	AH5
AC25	VSS	VSS	AH7
AC27	VSS	VSS	AH8
AC30	VSS	VSS	AJ11
AC31	VSS	VSS	AJ13
AC35	VSS	VSS	AJ17
AC37	VSS	VSS	AJ19
AC7	VSS	VSS	AJ23
AC8	VSS	VSS	AJ25
AD10	VSS	VSS	AJ3
AD12	VSS	VSS	AJ30
AD14	VSS	VSS	AJ31
AD18	VSS	VSS	AJ35
AD20	VSS	VSS	AJ7
AD22	VSS	VSS	AJ9
AD26	VSS	VSS	AK10
AD29	VSS	VSS	AK14
AD3	VSS	VSS	AK16
AD31	VSS	VSS	AK18
AD34	VSS	VSS	AK20
AD7	VSS	VSS	AK22
AE11	VSS	VSS	AK26
AE13	VSS	VSS	AK28
AE15	VSS	VSS	AK5
AE17	VSS	VSS	AK7
AE19	VSS	VSS	AK8
AE21	VSS	VSS	AL1
AE25	VSS	VSS	AL10
AE27	VSS	VSS	AL13
AE30	VSS	VSS	AL15
AE31	VSS	VSS	AL19
AE33	VSS	VSS	AL2

U3900 H9M BGA SYM 16 OF 18

OMIT_TABLE
CRITICAL

AL21	VSS	VSS	AT19
AL23	VSS	VSS	AT20
AL25	VSS	VSS	AT21
AL27	VSS	VSS	AT23
AL29	VSS	VSS	AT24
AL31	VSS	VSS	AT26
AL32	VSS	VSS	AT27
AL33	VSS	VSS	AT29
AL36	VSS	VSS	AT3
AL37	VSS	VSS	AT31
AL5	VSS	VSS	AT32
AL7	VSS	VSS	AT34
AL9	VSS	VSS	AT35
AM11	VSS	VSS	AT37
AM12	VSS	VSS	AT4
AM17	VSS	VSS	AU1
AM2	VSS	VSS	AU10
AM22	VSS	VSS	AU15
AM24	VSS	VSS	AU2
AM28	VSS	VSS	AU20
AM32	VSS	VSS	AU23
AM36	VSS	VSS	AU24
AM5	VSS	VSS	AU27
AM6	VSS	VSS	AU32
AM7	VSS	VSS	AU33
AM8	VSS	VSS	AU36
AN1	VSS	VSS	AU37
AN10	VSS	VSS	AU6
AN12	VSS	VSS	AU8
AN14	VSS	VSS	AV1
AN15	VSS	VSS	AV10
AN17	VSS	VSS	AV11
AN19	VSS	VSS	AV13
AN20	VSS	VSS	AV15
AN21	VSS	VSS	AV16
AN24	VSS	VSS	AV18
AN26	VSS	VSS	AV2
AN27	VSS	VSS	AV20
AN29	VSS	VSS	AV22
AN31	VSS	VSS	AV25
AN32	VSS	VSS	AV27
AN37	VSS	VSS	AV28
AN6	VSS	VSS	AV3
AN7	VSS	VSS	AV30
AN8	VSS	VSS	AV32
AN9	VSS	VSS	AV33
AP10	VSS	VSS	AV35
AP15	VSS	VSS	AV36
AP20	VSS	VSS	AV37
AP23	VSS	VSS	AV6
AP24	VSS	VSS	B1
AP27	VSS	VSS	B11
AP3	VSS	VSS	B13
AP32	VSS	VSS	B16
AP33	VSS	VSS	B19
AP35	VSS	VSS	B2
AP5	VSS	VSS	B22
AP6	VSS	VSS	B24
AP8	VSS	VSS	B31
AP9	VSS	VSS	B34
AR1	VSS	VSS	B36
AR10	VSS	VSS	B37
AR11	VSS	VSS	B5
AR13	VSS	VSS	B6
AR15	VSS	VSS	C1
AR16	VSS	VSS	C11
AR18	VSS	VSS	C22
AR20	VSS	VSS	C23
AR22	VSS	VSS	C24
AR23	VSS	VSS	C25
AR24	VSS	VSS	C26
AR25	VSS	VSS	C27
AR27	VSS	VSS	C28
AR28	VSS	VSS	C29
AR30	VSS	VSS	C3
AR32	VSS	VSS	C30
AR37	VSS	VSS	C31
AR6	VSS	VSS	C32
AR8	VSS	VSS	C33
AT1	VSS	VSS	C35
AT10	VSS	VSS	C37
AT12	VSS	VSS	C4
AT14	VSS	VSS	C5
AT15	VSS	VSS	C6
AT17	VSS		

U3900 H9M BGA SYM 17 OF 18

OMIT_TABLE
CRITICAL

C7	VSS	VSS	G10
C9	VSS	VSS	G15
D1	VSS	VSS	G17
D10	VSS	VSS	G19
D11	VSS	VSS	G2
D12	VSS	VSS	G21
D13	VSS	VSS	G24
D14	VSS	VSS	G26
D16	VSS	VSS	G28
D17	VSS	VSS	G30
D19	VSS	VSS	G31
D20	VSS	VSS	G32
D22	VSS	VSS	G33
D24	VSS	VSS	G36
D25	VSS	VSS	G6
D26	VSS	VSS	G7
D27	VSS	VSS	G8
D28	VSS	VSS	H1
D29	VSS	VSS	H10
D30	VSS	VSS	H12
D31	VSS	VSS	H14
D32	VSS	VSS	H16
D33	VSS	VSS	H18
D35	VSS	VSS	H2
D36	VSS	VSS	H20
D37	VSS	VSS	H24
D5	VSS	VSS	H26
D6	VSS	VSS	H29
D8	VSS	VSS	H31
E11	VSS	VSS	H33
E12	VSS	VSS	H36
E13	VSS	VSS	H37
E14	VSS	VSS	H5
E15	VSS	VSS	H7
E16	VSS	VSS	H9
E17	VSS	VSS	J17
E18	VSS	VSS	J19
E19	VSS	VSS	J21
E20	VSS	VSS	J23
E21	VSS	VSS	J25
E22	VSS	VSS	J27
E24	VSS	VSS	J30
E25	VSS	VSS	J31
E26	VSS	VSS	J7
E27	VSS	VSS	J8
E28	VSS	VSS	K10
E29	VSS	VSS	K12
E3	VSS	VSS	K14
E30	VSS	VSS	K16
E31	VSS	VSS	K18
E32	VSS	VSS	K20
E33	VSS	VSS	K22
E34	VSS	VSS	K24
E35	VSS	VSS	K26
E36	VSS	VSS	K28
E5	VSS	VSS	K29
E6	VSS	VSS	K3
F1	VSS	VSS	K31
F11	VSS	VSS	K33
F12	VSS	VSS	K35
F13	VSS	VSS	K5
F14	VSS	VSS	K7
F15	VSS	VSS	K9
F16	VSS	VSS	L1
F17	VSS	VSS	L11
F18	VSS	VSS	L13
F19	VSS	VSS	L15
F20	VSS	VSS	L17
F24	VSS	VSS	L19
F25	VSS	VSS	L21
F28	VSS	VSS	L23
F29	VSS	VSS	L25
F30	VSS	VSS	L27
F31	VSS	VSS	L30
F32	VSS	VSS	L31
F33	VSS	VSS	L37
F34	VSS	VSS	L7
F35	VSS	VSS	L8
F36	VSS	VSS	M10
F37	VSS	VSS	M12
F5	VSS	VSS	M14
F6	VSS	VSS	M16
F7	VSS	VSS	M18
F9	VSS	VSS	M20

U3900 H9M BGA SYM 18 OF 18

OMIT_TABLE
CRITICAL

M22	VSS	VSS	T3
M24	VSS	VSS	T31
M26	VSS	VSS	T33
M28	VSS	VSS	T35
M29	VSS	VSS	T37
M31	VSS	VSS	T5
M7	VSS	VSS	T7
M9	VSS	VSS	U11
N1	VSS	VSS	U13
N11	VSS	VSS	U15
N13	VSS	VSS	U17
N15	VSS	VSS	U19
N19	VSS	VSS	U21
N21	VSS	VSS	U23
N23	VSS	VSS	U25
N25	VSS	VSS	U27
N27	VSS	VSS	U30
N3	VSS	VSS	U31
N30	VSS	VSS	U7
N31	VSS	VSS	U8
N33	VSS	VSS	V1
N35	VSS	VSS	V10
N37	VSS	VSS	V12
N5	VSS	VSS	V14
N7	VSS	VSS	V16
N8	VSS	VSS	V20
P10	VSS	VSS	V22
P12	VSS	VSS	V24
P14	VSS	VSS	V26
P18	VSS	VSS	V28
P20	VSS	VSS	V29
P22	VSS	VSS	V3
P24	VSS	VSS	V31
P26	VSS	VSS	V35
P28	VSS	VSS	V37
P29	VSS	VSS	W11
P31	VSS	VSS	W13
P5	VSS	VSS	W15
P7	VSS	VSS	W17
R11	VSS	VSS	W19
R13	VSS	VSS	W2
R15	VSS	VSS	W21
R17	VSS	VSS	W23
R19	VSS	VSS	W25
R21	VSS	VSS	W27
R23	VSS	VSS	W30
R25	VSS	VSS	W31
R27	VSS	VSS	W33
R30	VSS	VSS	W36
R31	VSS	VSS	W5
R7	VSS	VSS	Y10
R8	VSS	VSS	Y12
T1	VSS	VSS	Y14
T10	VSS	VSS	Y16
T12	VSS	VSS	Y2
T14	VSS	VSS	Y20
T16	VSS	VSS	Y22
T18	VSS	VSS	Y24
T20	VSS	VSS	Y26
T22	VSS	VSS	Y28
T24	VSS	VSS	Y29
T26	VSS	VSS	Y31
T28	VSS	VSS	Y36
T29	VSS		

NotebookSchematics.com
Schematics, Boardviews & Smartphone Service Manuals

SYNC_MASTER=T290_BIGSUR SYNC_DATE=01/31/2017

PAGE TITLE
SoC Ground

Apple Inc.

DRAWING NUMBER 051-02166 SIZE D
REVISION 4.0.0
BRANCH evt-mars-0
PAGE 46 OF 150
SHEET 44 OF 108

NOTICE OF PROPRIETARY PROPERTY:
THE INFORMATION CONTAINED HEREIN IS THE PROPRIETARY PROPERTY OF APPLE INC.
THE POSESSOR AGREES TO THE FOLLOWING:
I TO MAINTAIN THIS DOCUMENT IN CONFIDENCE
II NOT TO REPRODUCE OR COPY IT
III NOT TO REVEAL OR PUBLISH IT IN WHOLE OR PART
IV ALL RIGHTS RESERVED

BOM_COST_GROUP=SOC

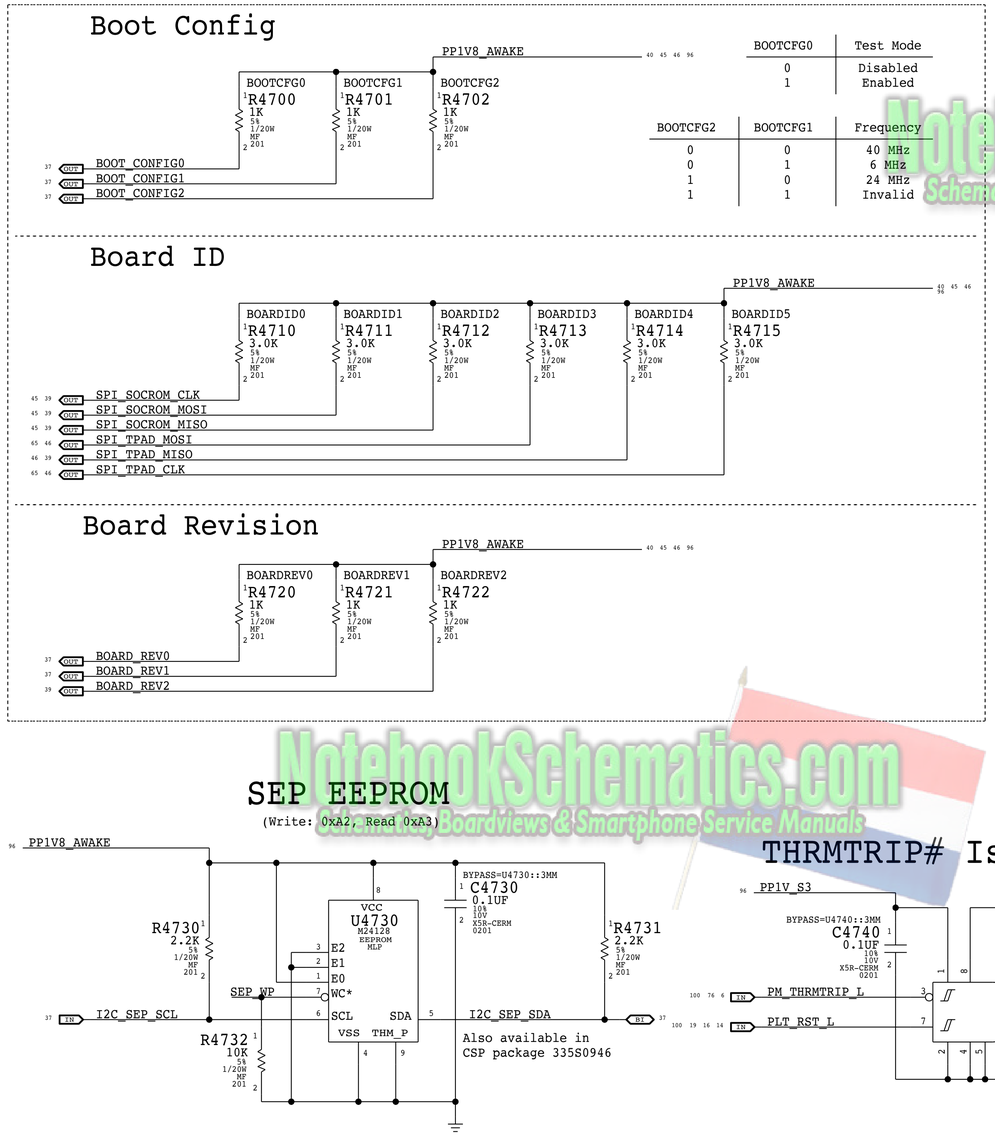

BOOTCFG0	Test Mode
0	Disabled
1	Enabled

BOOTCFG2	BOOTCFG1	Frequency
0	0	40 MHz
0	1	6 MHz
1	0	24 MHz
1	1	Invalid

PECI Level Shifting

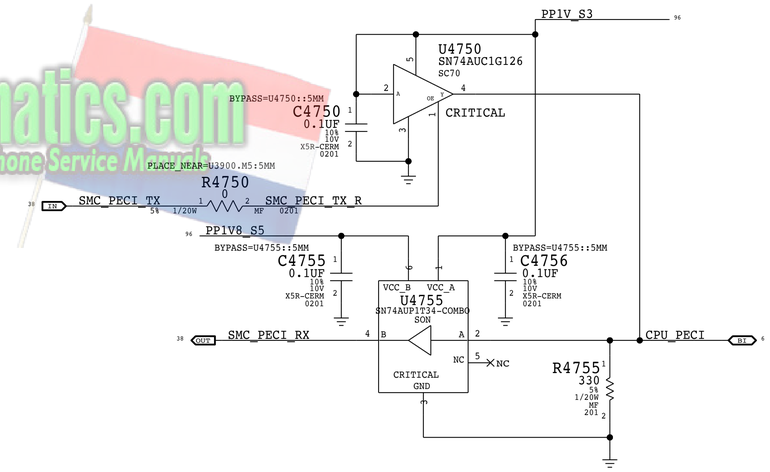

PCH PM Level Shifting

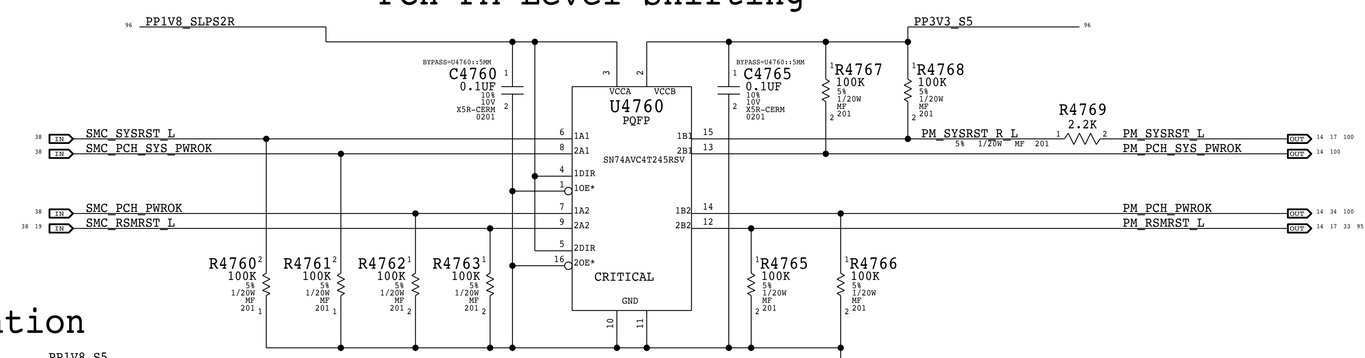

SEP EEPROM

(Write: 0xA2, Read 0xA3)

THRMTRIP# Isolation

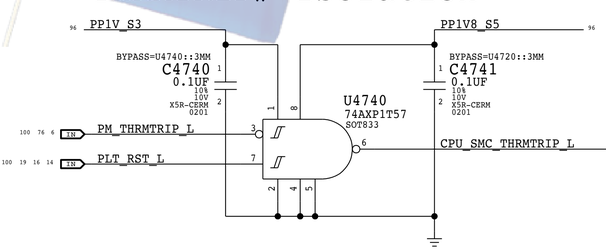

SoC ROM

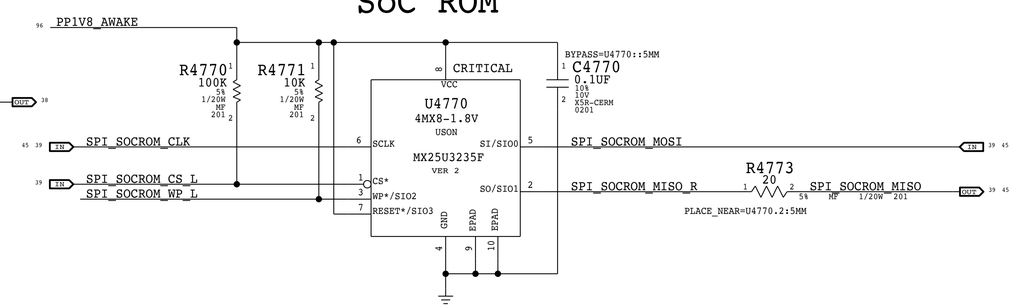

SMC AVREF Supply

Footprint supports 353S01042 alternate

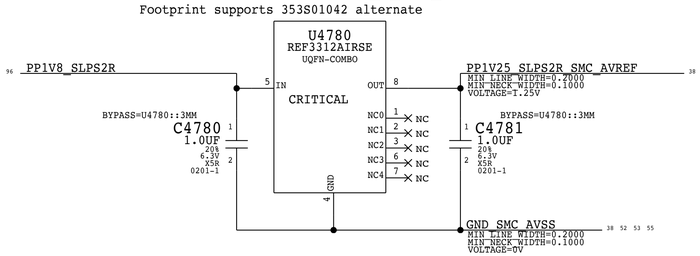

PROCHOT# Level Shifting

rdar://problem/34583713

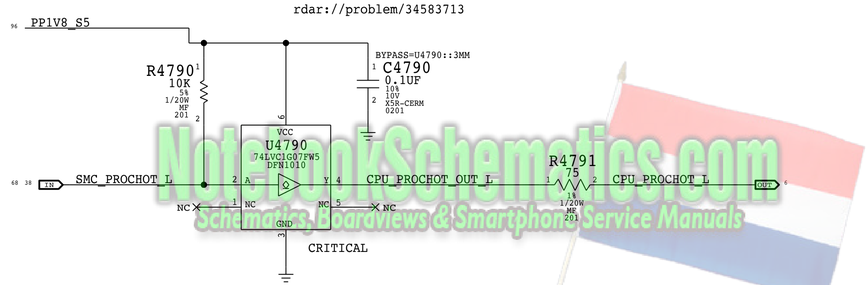

NotebookSchematics.com
Schematics, Boardviews & Smartphone Service Manuals

BOM_COST_GROUP=SOC

SYNC_MASTER=J132_JIN SYNC_DATE=09/05/2017

PAGE TITLE: SoC Shared Support

Apple Inc.

DRAWING NUMBER: 051-02166 SIZE: D

REVISION: 4.0.0

BRANCH: evt-mars-0

PAGE: 47 OF 150

SHEET: 45 OF 108

NOTICE OF PROPRIETARY PROPERTY:
THE INFORMATION CONTAINED HEREIN IS THE PROPRIETARY PROPERTY OF APPLE INC.
THE POSESSOR AGREES TO THE FOLLOWING:
I TO MAINTAIN THIS DOCUMENT IN CONFIDENCE
II NOT TO REPRODUCE OR COPY IT
III NOT TO REVEAL OR PUBLISH IT IN WHOLE OR PART
IV ALL RIGHTS RESERVED

Alternate Feedback Sense

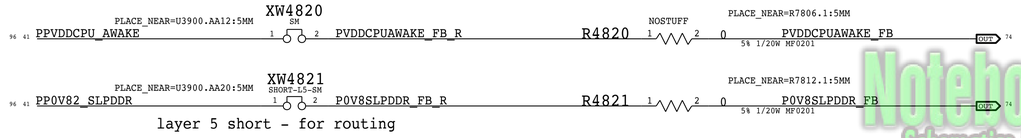

layer 5 short - for routing

PCIe Up R2D AC Caps

(All Caps Except C4822, C4823)

GND_VOID=TRUE

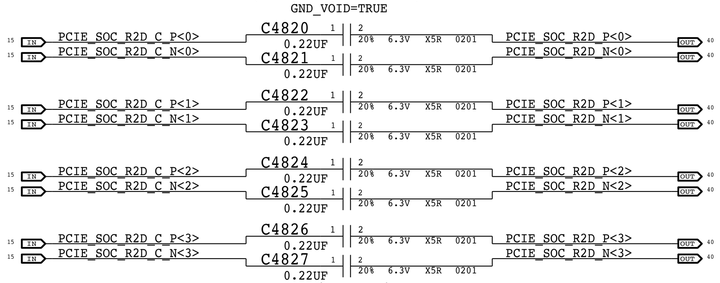

GPIO Source Termination

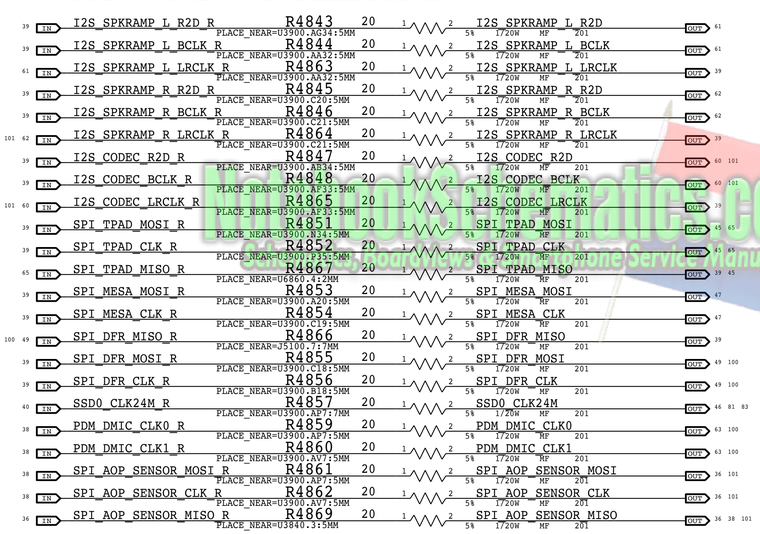

Project Specific Pull-Ups

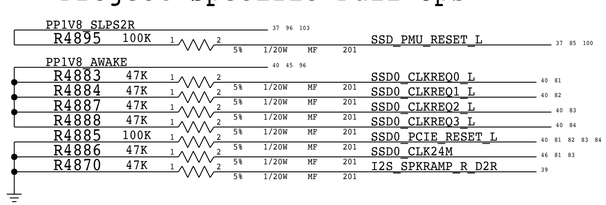

Lid Detect Sensors

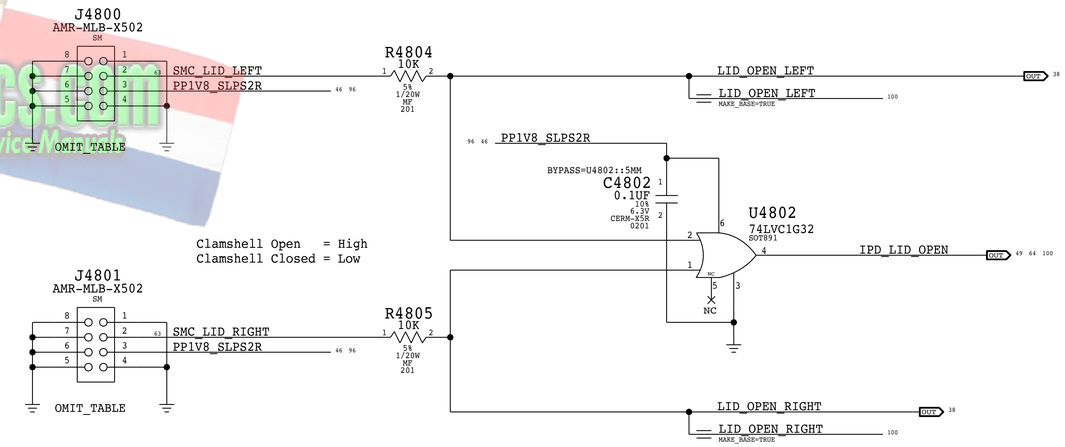

SOC Overloaded GPIOs

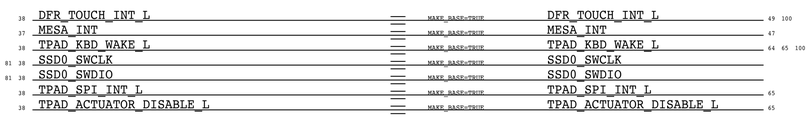

Platform-Specific GPIOs

HPD KSF Comp Circuit

R4830 needs to be characterized and adjusted if necessary

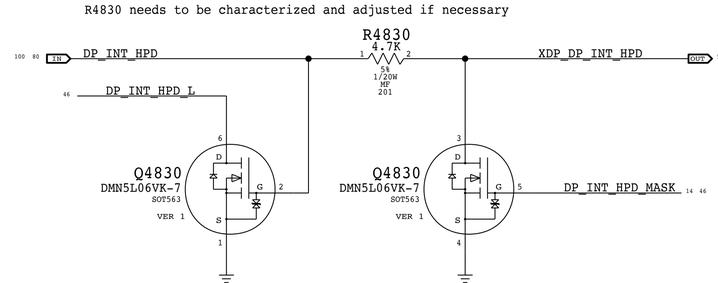

BOM GROUP	BOM OPTIONS
BOARD_REV:111	BOARDREV2,BOARDREV1,BOARDREV0
BOARD_REV:110	BOARDREV2,BOARDREV1
BOARD_REV:101	BOARDREV2,BOARDREV0
BOARD_REV:100	BOARDREV2
BOARD_REV:011	BOARDREV1,BOARDREV0

BOM GROUP	BOM OPTIONS
BOARD_ID	BOARDID2,BOARDID3

BOM_COST_GROUP=SOC

SYNC_MASTER=J132_JACK SYNC_DATE=11/03/2017

PAGE TITLE

SoC Project Support

Apple Inc.

DRAWING NUMBER 051-02166 SIZE D

REVISION 4.0.0

BRANCH evt-mars-0

PAGE 48 OF 150

SHEET 46 OF 108

NOTICE OF PROPRIETARY PROPERTY:
THE INFORMATION CONTAINED HEREIN IS THE PROPRIETARY PROPERTY OF APPLE INC.
THE POSESSOR AGREES TO THE FOLLOWING:
I TO MAINTAIN THIS DOCUMENT IN CONFIDENCE
II NOT TO REPRODUCE OR COPY IT
III NOT TO REVEAL OR PUBLISH IT IN WHOLE OR PART
IV ALL RIGHTS RESERVED

NotebookSchematics.com
Schematics, Boardviews & Smartphone Service Manuals

ISOLATE FROM OTHER COMPONENTS/NETS AS MUCH AS POSSIBLE

ESD Filters

R4912 0 5% 1/20W MF 0201
SPI_MESA_MISO (OUT, 47 39) — SPI_MESA_MISO_CONN (47 100)
C4952 56PF 5% 25V NP0-C0G 0201

R4953 680 5% 1/20W MF 201
MESA_INT (OUT, 46) — MESA_INT_CONN (47 100)
C4953 100PF 5% 25V C0G 0201

R4954 680 5% 1/20W MF 201
MESA_BOOST_EN (47) — MESA_BOOST_EN_CONN (47 100)
C4954 100PF 5% 25V C0G 0201

T151 FLEX CONNECTOR

PLUG (516S00115) - X434/ X435 Jumper
RECEPTACLE (516S00203) - MLB

J4900 505066-1220 F-ST-SM

PP3V0_MESA_FILT_CONN (100 47)	1	
SPI_MESA_MISO_CONN (100 47)	2	1 PP1V8_MESA_FILT_CONN (47 100)
MESA_INT_CONN (100 47)	4	3
MESA_BOOST_EN_CONN (100 47)	6	5 SPI_MESA_MOSI_CONN (47 100)
NC	8	7 PMU_ONOFF_R_L_CONN (47 100)
NC	10	9 SPI_MESA_CLK_CONN (47 100)
	12	11 PP16V0_MESA_FILT_CONN (47 100)
	14	13
	16	15

ESD_GND (100) — P2MM SM PP — PP4900
MIN_LINE_WIDTH=0.0900 — P2MM SM PP — PP4901

ISOLATE FROM OTHER COMPONENTS/NETS AS MUCH AS POSSIBLE

ESD Filters

R4950 0 5% 1/20W MF 0201
SPI_MESA_MOSI_CONN (100 47) — SPI_MESA_MOSI (IN, 46)
C4950 56PF 5% 25V NP0-C0G 0201

R4951 56 5% 1/20W MF 201
SPI_MESA_CLK_CONN (100 47) — SPI_MESA_CLK (IN, 46)
C4951 56PF 5% 25V NP0-C0G 0201

R4911 0 5% 1/20W MF 0201
PMU_ONOFF_R_L_CONN (100 47) — PMU_ONOFF_L (OUT, 66 76 103)
C4955 100PF 5% 25V C0G 0201

MOJAVE 16V BOOST

Mesa Power Sequencing Requirements

Power On: 1V8 -> 3V3 -> 16V0

Output Voltage	16.0V +/- 2%
Iout (max avg)	6mA
OCP (min)	13 mA
Active Discharge	15 mA sink
Max Output Cap	0.5uF @ 16V

PLACE_NEAR=U4900:5MM
L4901 1.0UH-0.4A-0.6360HM 0402
MIN_LINE_WIDTH=0.0900 MIN_NECK_WIDTH=0.0520 VOLTAGE=3.3V DIDT=TRUE
PP3V3_G3H_MESA_SW
PP3V3_G3H_RTC_MESA (97 47)
BYPASS=U4900.A2::3MM
C4910 10UF 20% 6.3V CERM-X5R 0402-9
MESA_BOOST_EN (47)

U4900 LM3638 BGA
B1 SW; A2 VIN; B2 EN_M; A3 EN_S; C2 LDOIN; C1 PMID; C3 VOUT; A1 PGND; B3 AGND

Load Cap:6.6uF nom
EDP:13.75mA
C4924 2.2UF 20% 25V X5R 0402-3
C4925 2.2UF 20% 25V X5R 0402-3
MIN_LINE_WIDTH=0.2000 MIN_NECK_WIDTH=0.1200 VOLTAGE=16V
C4926 56PF 5% 25V NP0-C0G 0201
PP16V0_MESA
BYPASS=U4900.C3::3MM
BYPASS=U4900.C3::4MM
BYPASS=U4900.C3::5MM

EMC Filter

FL4900 80-OHM-25%-500MA 0201
MIN_LINE_WIDTH=0.2000 MIN_NECK_WIDTH=0.1200 VOLTAGE=16V
PP16V0_MESA_FILT_CONN (47 100)
C4927 100PF 5% 25V C0G 0201

VOLTAGE=17V
PP17V0_MOJAVE_LDOIN
C4923 2.2UF 20% 25V X5R 0402-3

Output Voltage	3.0V +/- 2%
Iout (max avg)	250mA
Dropout Voltage	155mV
OCP (min)	250 mA
Active Discharge	280 Ohm Typ

3.0V MESA

PP3V3_G3H_RTC_MESA (97 47)
C4911 1UF 10% 10V X5R-CERM 0402
BYPASS=U4910.4::3MM
PP1V8_MESA (47)

U4910 NCP160AMX300 XDFN-COMBO-THICKSTNCL
IN, EN, OUT, GND EPAD

MIN_LINE_WIDTH=0.2000 MIN_NECK_WIDTH=0.1200 VOLTAGE=3.0V
Load Cap:14.3uF nom
EDP:100mA
PP3V0_MESA
BYPASS=U4910.1::3MM
C4916 1UF 10% 10V X5R-CERM 0402

EMC Filter

FL4910 80-OHM-25%-500MA 0201
MIN_LINE_WIDTH=0.2000 MIN_NECK_WIDTH=0.1200 VOLTAGE=3.0V
PP3V0_MESA_FILT_CONN (47 100)
C4920 2.2UF 20% 6.3V X5R-CERM 0201
C4921 2.2UF 20% 6.3V X5R-CERM 0201
C4922 2.2UF 20% 6.3V X5R-CERM 0201
C4928 0.1UF 10% 10V X6S-CERM 0201
C4929 100PF 5% 25V C0G 0201

PP1V8_G3S (97)
R4922 100K 5% 1/20W MF 201 — MESA_PWR_EN (37 47)
PP1V8_MESA (47)
R4924 100K 5% 1/20W MF 201 — SPI_MESA_MISO (39 47)
R4923 100K 5% 1/20W MF 201 — MESA_BOOST_EN (47)

Output Voltage	1.825V +/- 2%
Iout (max avg)	250mA
Dropout Voltage	50mV Typ @ 100mA
OCP (min)	250 mA
Active Discharge	230 Ohm Typ
Max Output Cap	10uF

1.8V MESA

PP3V3_G3H_RTC_MESA (97 47)
C4912 1UF 10% 10V X5R-CERM 0402
BYPASS=U4920.4::3MM
MESA_PWR_EN (IN, 47 37)

U4920 LP5907SNX-1.825 X2SON-COMBO-THICKSTNCL
VIN, EN, VOUT, GND EPAD

MIN_LINE_WIDTH=0.2000 MIN_NECK_WIDTH=0.1200 VOLTAGE=I.825V
Load Cap:3.4uF nom
EDP:0.5mA
PP1V8_MESA (47)
BYPASS=U4920.1::3MM
C4914 1UF 10% 10V X5R-CERM 0402

EMC Filter

FL4920 80-OHM-25%-500MA 0201
MIN_LINE_WIDTH=0.2000 MIN_NECK_WIDTH=0.1200 VOLTAGE=1.825V
PP1V8_MESA_FILT_CONN (47 100)
C4918 2.2UF 20% 6.3V X5R-CERM 0201
C4917 100PF 5% 25V C0G 0201

BOM_COST_GROUP=T151

PAGE TITLE	T151
Apple Inc.	DRAWING NUMBER 051-02166 SIZE D
	REVISION 4.0.0
NOTICE OF PROPRIETARY PROPERTY: THE INFORMATION CONTAINED HEREIN IS THE PROPRIETARY PROPERTY OF APPLE INC. THE POSESSOR AGREES TO THE FOLLOWING: I TO MAINTAIN THIS DOCUMENT IN CONFIDENCE II NOT TO REPRODUCE OR COPY IT III NOT TO REVEAL OR PUBLISH IT IN WHOLE OR PART IV ALL RIGHTS RESERVED	BRANCH evt-mars-0
	PAGE 49 OF 150
	SHEET 47 OF 108

NotebookSchematics.com
Schematics, Boardviews & Smartphone Service Manuals

NotebookSchematics.com
Schematics, Boardviews & Smartphone Service Manuals

STOCKHOLM

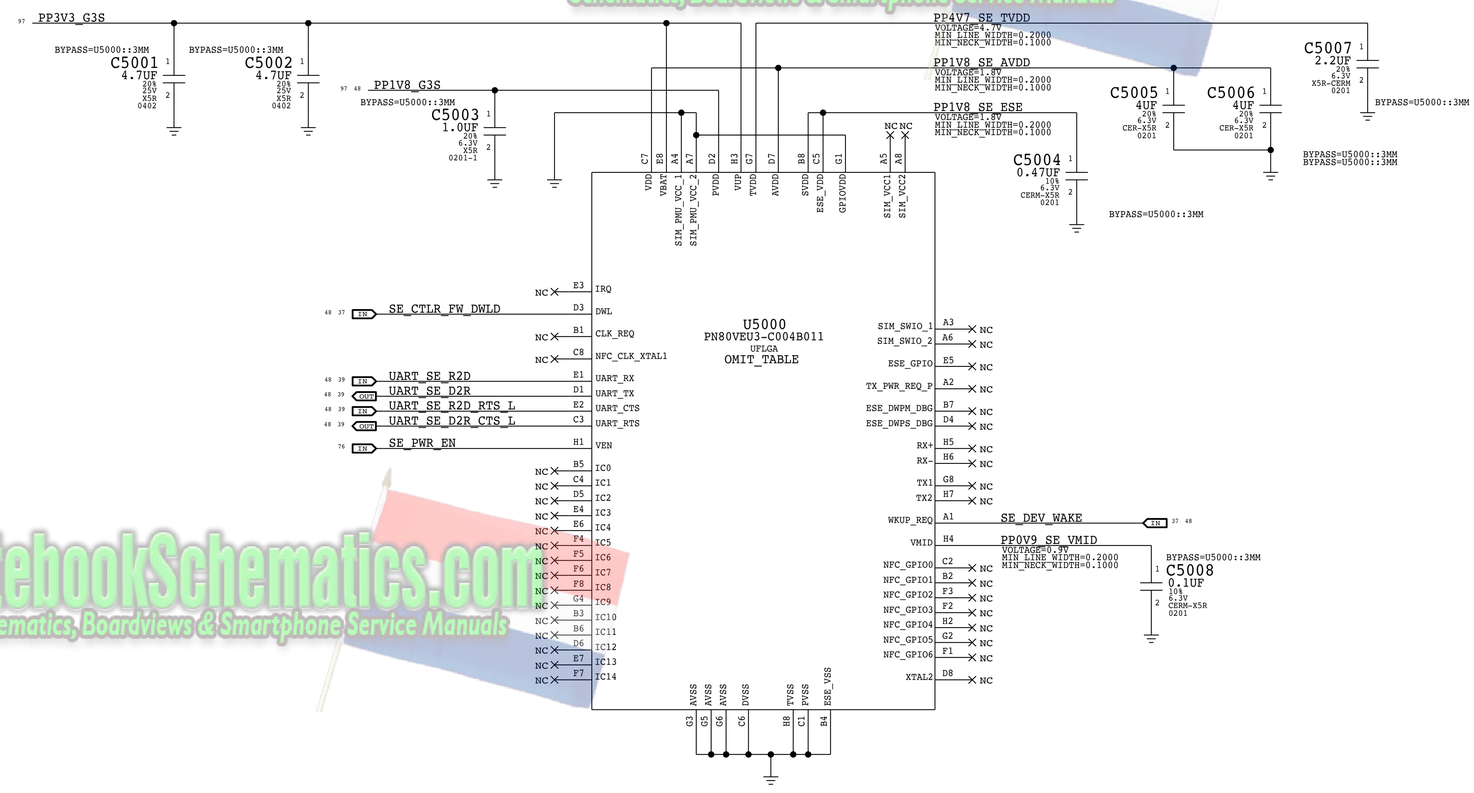

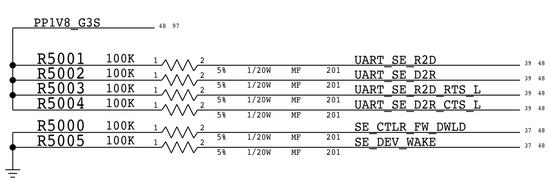

BOM_COST_GROUP=SOC

NotebookSchematics.com
Schematics, Boardviews & Smartphone Service Manuals

SYNC_MASTER=J132_GREG SYNC_DATE=05/16/2017

PAGE TITLE
Secure Element

Apple Inc.

DRAWING NUMBER 051-02166 SIZE D
REVISION 4.0.0
BRANCH evt-mars-0
PAGE 50 OF 150
SHEET 48 OF 108

NOTICE OF PROPRIETARY PROPERTY:
THE INFORMATION CONTAINED HEREIN IS THE PROPRIETARY PROPERTY OF APPLE INC.
THE POSESSOR AGREES TO THE FOLLOWING:
I TO MAINTAIN THIS DOCUMENT IN CONFIDENCE
II NOT TO REPRODUCE OR COPY IT
III NOT TO REVEAL OR PUBLISH IT IN WHOLE OR PART
IV ALL RIGHTS RESERVED

T139 Support

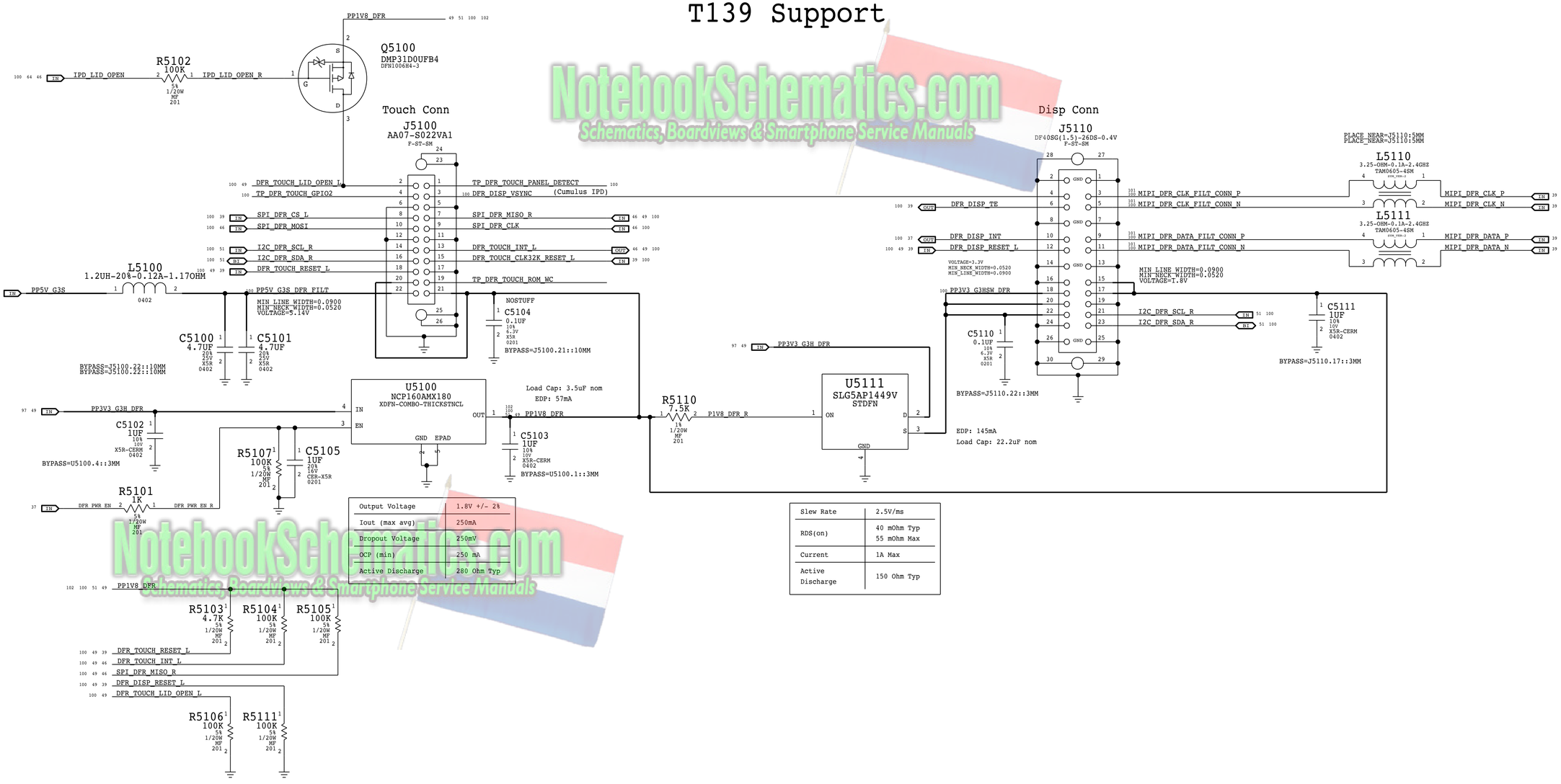

Output Voltage	1.8V +/- 2%
Iout (max avg)	250mA
Dropout Voltage	250mV
OCP (min)	250 mA
Active Discharge	280 Ohm Typ

Slew Rate	2.5V/ms
RDS(on)	40 mOhm Typ 55 mOhm Max
Current	1A Max
Active Discharge	150 Ohm Typ

BOM_COST_GROUP=T139

NotebookSchematics.com
Schematics, Boardviews & Smartphone Service Manuals

PAGE TITLE: T139 Support

Apple Inc.

DRAWING NUMBER: 051-02166 | SIZE: D

REVISION: 4.0.0

BRANCH: evt-mars-0

PAGE: 51 OF 150

SHEET: 49 OF 108

NOTICE OF PROPRIETARY PROPERTY:
THE INFORMATION CONTAINED HEREIN IS THE PROPRIETARY PROPERTY OF APPLE INC.
THE POSESSOR AGREES TO THE FOLLOWING:
I TO MAINTAIN THIS DOCUMENT IN CONFIDENCE
II NOT TO REPRODUCE OR COPY IT
III NOT TO REVEAL OR PUBLISH IT IN WHOLE OR PART
IV ALL RIGHTS RESERVED

CNL-LP PCH S0 "SMBus 0" Connections

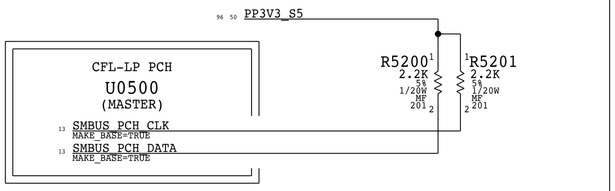

SMC I2C "3" S0 Connections

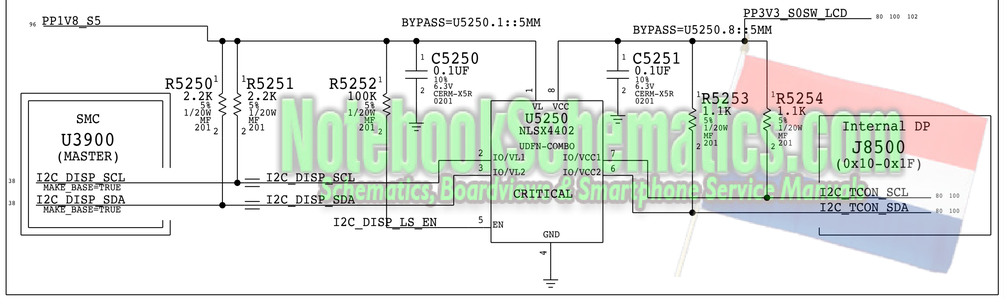

SMC I2C "4" G3H Connections

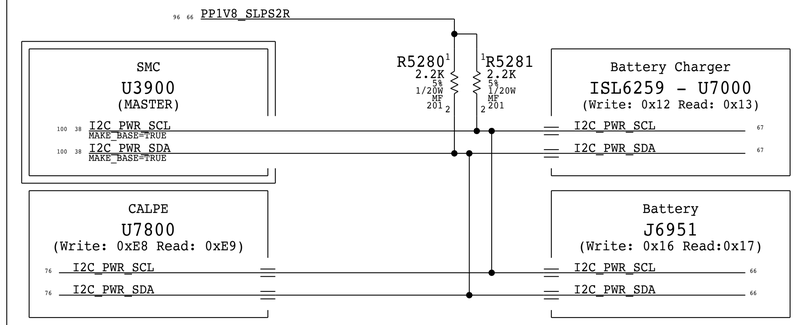

SMC I2C "6" G3H Connections

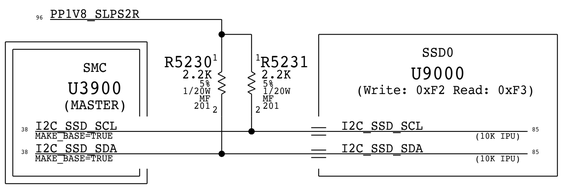

SMC I2C "5" G3S Connections

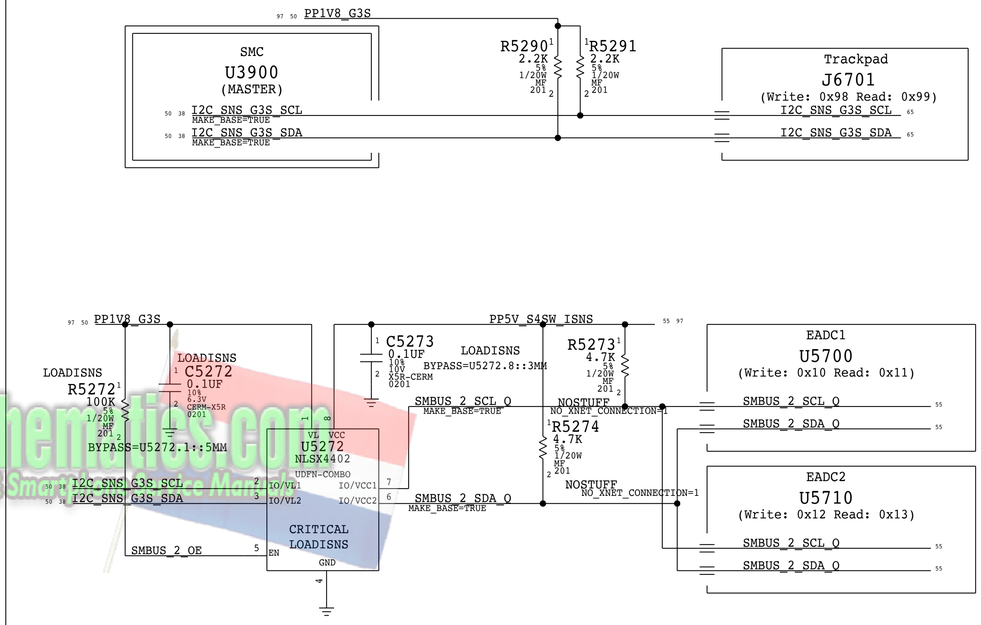

SMC I2C "1" S0 Connections

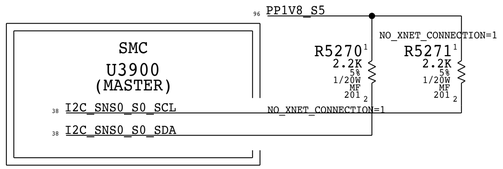

CNL-LP PCH S0 "SMLink 0" Connections

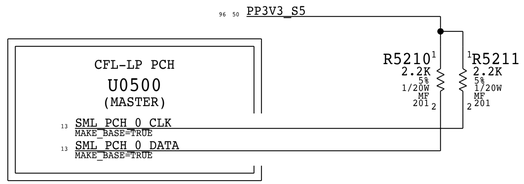

SMC I2C "2" S0 Connections

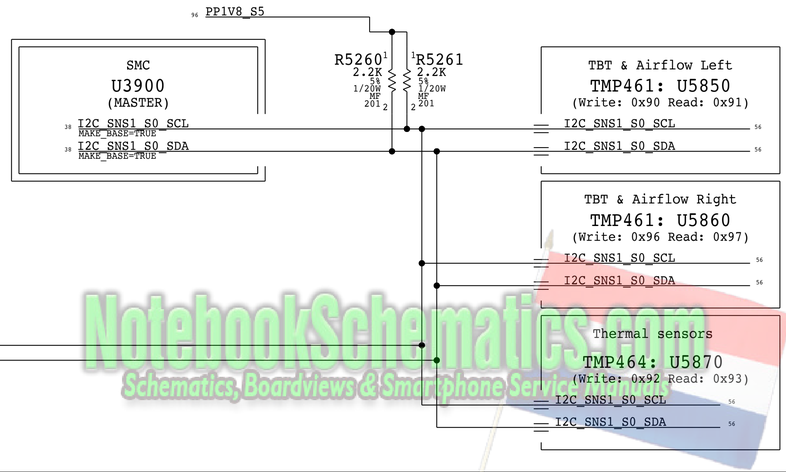

SMC I2C "0" G3H CONNECTIONS

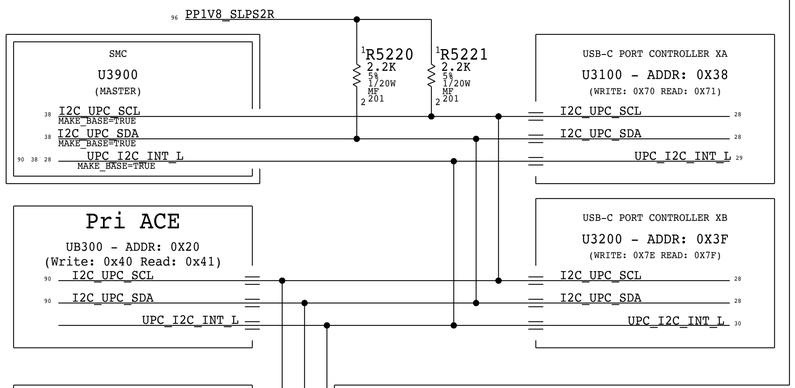

CNL-LP PCH S0 "SMLink 1" Connections

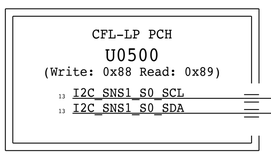

SMLink 1 is slave port to access PCH.

BOM_COST_GROUP=SMC

PAGE TITLE

I2C Connections 1

Apple Inc.

DRAWING NUMBER	051-02166
SIZE	D
REVISION	4.0.0
BRANCH	evt-mars-0
PAGE	52 OF 150
SHEET	50 OF 108

NOTICE OF PROPRIETARY PROPERTY:
THE INFORMATION CONTAINED HEREIN IS THE PROPRIETARY PROPERTY OF APPLE INC.
THE POSESSOR AGREES TO THE FOLLOWING:
I TO MAINTAIN THIS DOCUMENT IN CONFIDENCE
II NOT TO REPRODUCE OR COPY IT
III NOT TO REVEAL OR PUBLISH IT IN WHOLE OR PART
IV ALL RIGHTS RESERVED

NotebookSchematics.com
Schematics, Boardviews & Smartphone Service Manuals

AP I2C "0" G3S Connections

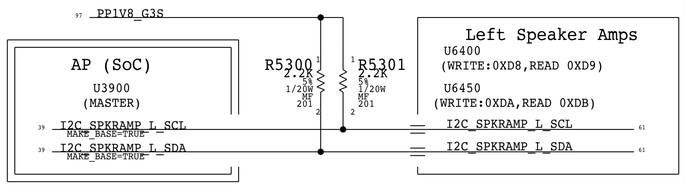

AP I2C "1" G3S Connections

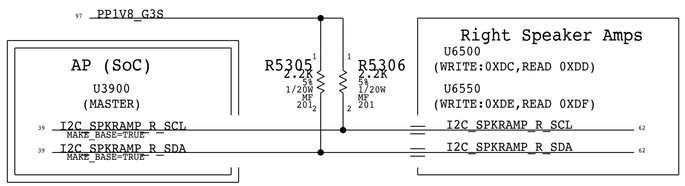

AP I2C "2" Codec Connections

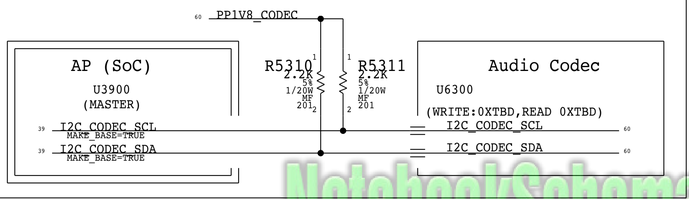

AP I2C "3" G3S Connections

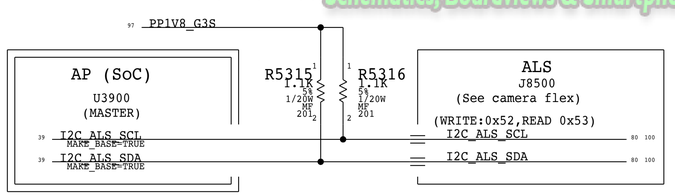

AP I2C "4" DFR Connections

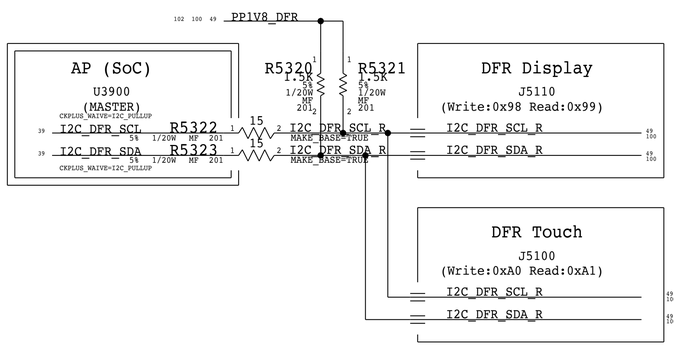

AP I2C "5" Awake Connections

ISP I2C "1" G3S Connections

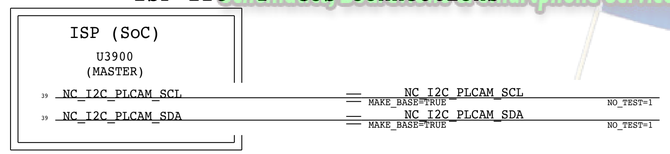

AOP I2C "0" G3S Connections

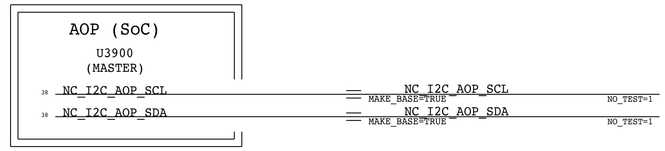

ISP I2C "0" G3S Connections

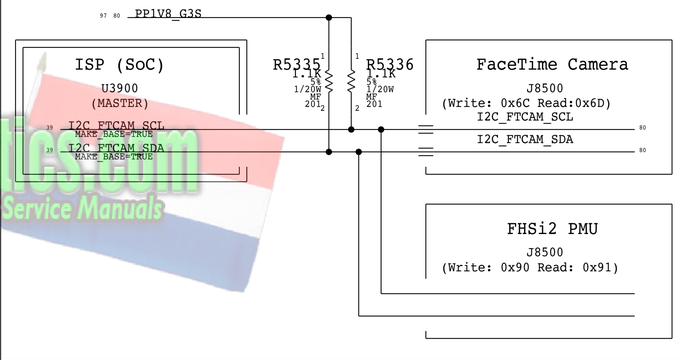

Device	SMC IF	ADDR. (8b)
ACE XA	I2C0	0X70/1
ACE XB	I2C0	0X7E/F
ACE TA	I2C0	0X40/1
ACE TB	I2C0	0X4E/F
NC.	I2C1	
Temp. Sensor Left	I2C2	0X90/1
Temp. Sensor Right	I2C2	0X96/7
Plateform Thermal Sensor	I2C2	0X92/3
PCH	I2C2	0X88/9
TCON	I2C3	0X10-1F
Charger	I2C4	0X12/3
Battery	I2C4	0X16/7
Calpe	I2C4	0XE8/9
Trackpad	I2C5	0X98/9
EADC1	I2C5	0X10/1
EADC2	I2C5	0X12/3
SSD	I2C6	0XF2/3
SoC IF		
Left Spkr Amp.(U6400)	I2C0	0XD8/9
Left Spkr Amp.(U6450)	I2C0	0XDA/B
Right Spkr Amp.(U6500)	I2C1	0XDC/D
Right Spkr Amp.(U6550)	I2C1	0XDE/F
Audio Codec	I2C2	0X90/1
ALS	I2C3	0X52/3
DFR Display	I2C4	0X98/9
DFR Touch	I2C4	0XA0/1
NC.	I2C5	
Spkr ID1	I2C6	
Spkr ID0	I2C6	
SIP IF		
FT Camera	I2C0	0X6C/D
FHSi2	I2C0	0X90/1
NC.	I2C1	
AOP IF		
NC.	I2C0	

BOM_COST_GROUP=SMC

PAGE TITLE
I2C Connections 2

Apple Inc.

DRAWING NUMBER 051-02166 SIZE D
REVISION 4.0.0
BRANCH evt-mars-0
PAGE 53 OF 150
SHEET 51 OF 108

NOTICE OF PROPRIETARY PROPERTY:
THE INFORMATION CONTAINED HEREIN IS THE PROPRIETARY PROPERTY OF APPLE INC.
THE POSESSOR AGREES TO THE FOLLOWING:
I TO MAINTAIN THIS DOCUMENT IN CONFIDENCE
II NOT TO REPRODUCE OR COPY IT
III NOT TO REVEAL OR PUBLISH IT IN WHOLE OR PART
IV ALL RIGHTS RESERVED

NotebookSchematics.com
Schematics, Boardviews & Smartphone Service Manuals

CPU High Side Current Sense (IC0R)

Gain: 100x, EDP: 17.259 A
Rsense: 0.002 (R5400)
Vsense: 34.518 mV, Range: 12.5 A
SMC ADC: 00

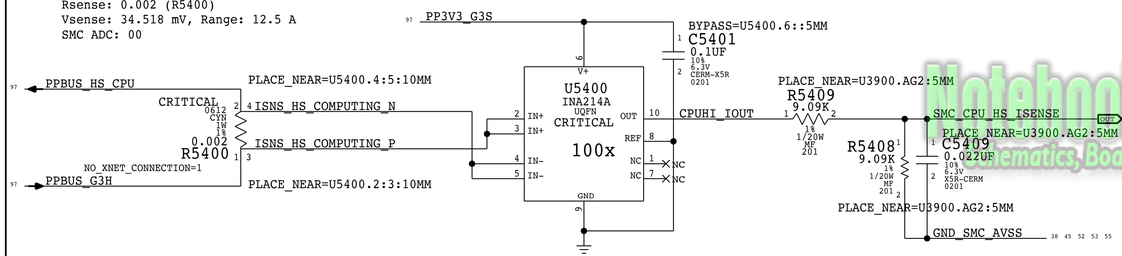

OTHER 5V High Side Current Sense (IO5R)

Gain: 200x, EDP: 1.3 A
Rsense: 0.01 (R5410) or Rsense SHORT
Vsense: 13 mV, Range: 1.5 A
MUX: A1

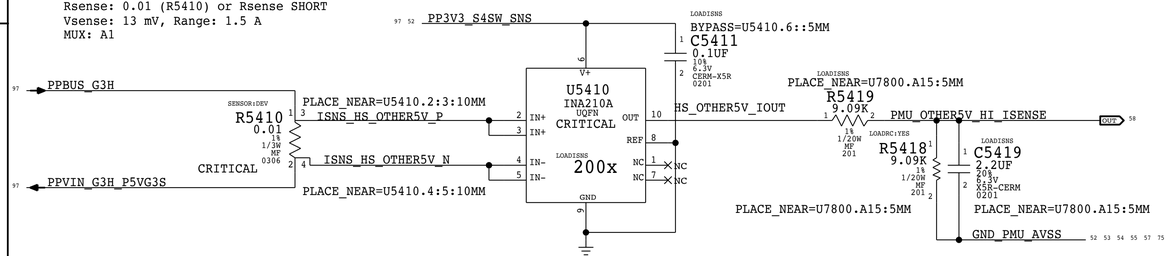

OTHER 3.3V High Side Current Sense (IO3R)

Gain: 200x, EDP: 4.03 A
Rsense: 0.003 (R5440) or Rsense SHORT
Vsense: 12.09 mV, Range: 5 A
MUX: A0

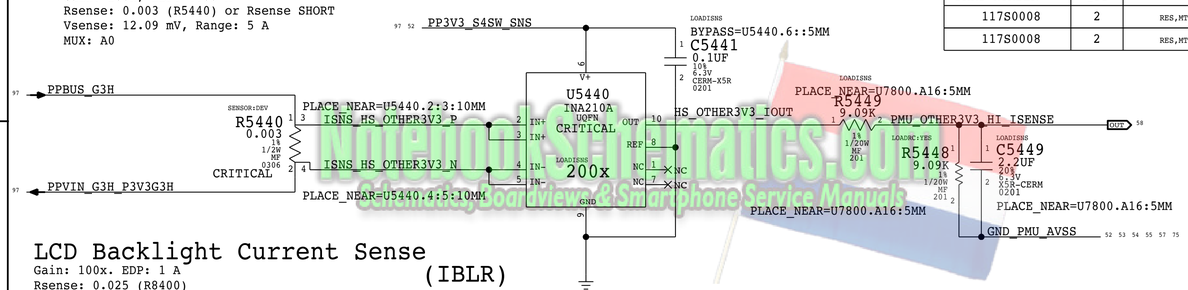

LCD Backlight Current Sense (IBLR)

Gain: 100x. EDP: 1 A
Rsense: 0.025 (R8400)
Vsense: 25 mV, Range: 2.4 A
EADC1: CH0

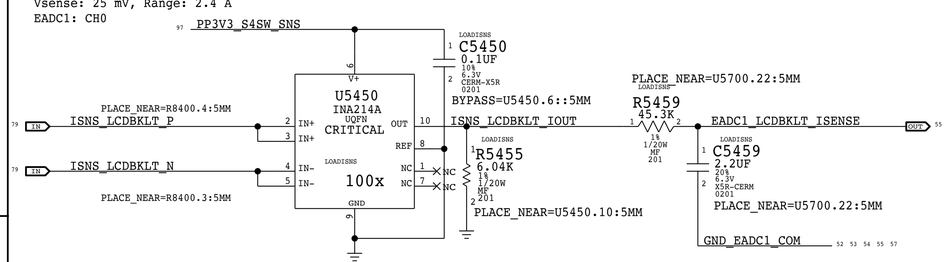

NAND Current Sense (IHNR)

Gain: 200x, EDP: 0.6 A
Rsense: 0.02 (R5460) or Rsensse SHORT
Vsense: 12 mV, Range: 0.75 A
MUX: A6

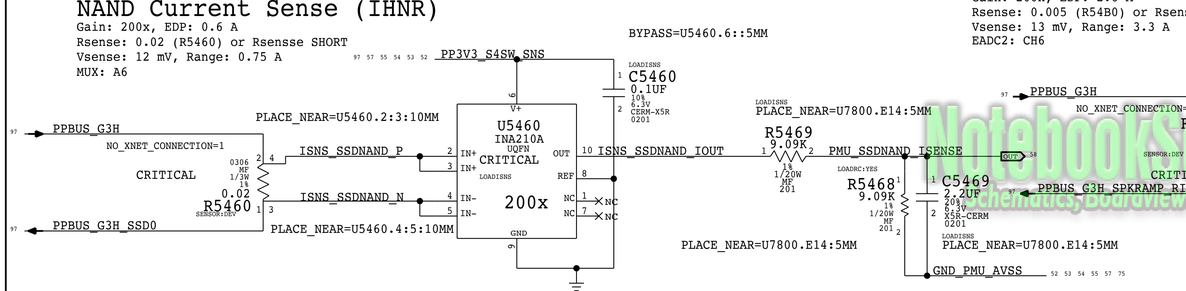

PBUS Voltage Sense & Enable (VP0R)

Gain: 0.167x
Vnominal: 12.6 V, Range: 17.97 V
SMC ADC: 01

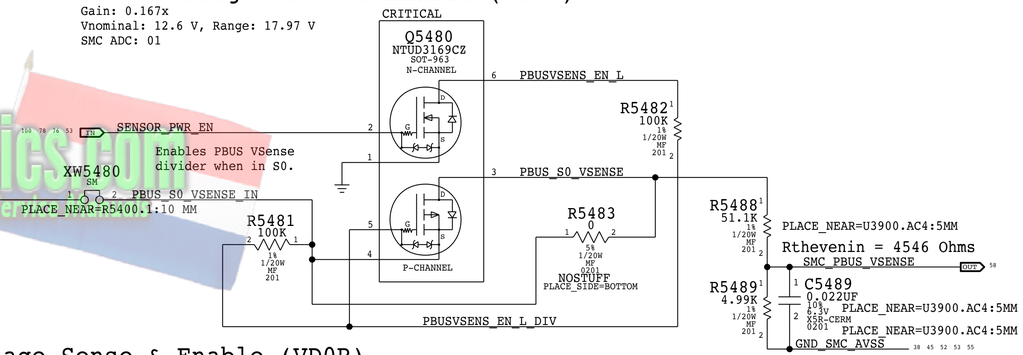

DC In Voltage Sense & Enable (VD0R)

Gain: 0.13x
Vnominal: 16.5 V, Range: 22.96 V
SMC ADC: 04

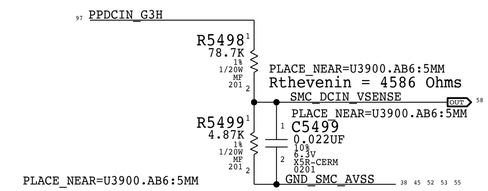

DC-IN (AMON) Current Sense (ID0R)

Charger Gain: 20x, EDP: 4.6 A
Rsense: 0.010 (R7020)
SMC ADC: 03

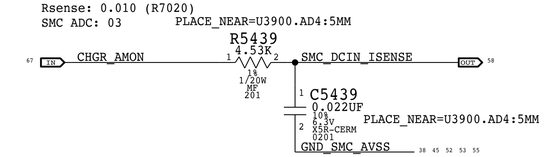

PART NUMBER	QTY	DESCRIPTION	REFERENCE DES	CRITICAL	BOM OPTION
117S0008	2	RES,MTL FLIM,100K,1/16W,0201,SMD,LF	R5418,R5448		LOADRC:NO
117S0008	2	RES,MTL FLIM,100K,1/16W,0201,SMD,LF	R5468,R5478		LOADRC:NO

3.3V RTC High Side Current Sense (IR3R)

Gain: 200x, EDP: 1.8 A
Rsense: 0.01 (R5420) or Rsense SHORT
Vsense: 18 mV, Range: 1.65 A
EADC1: CH4

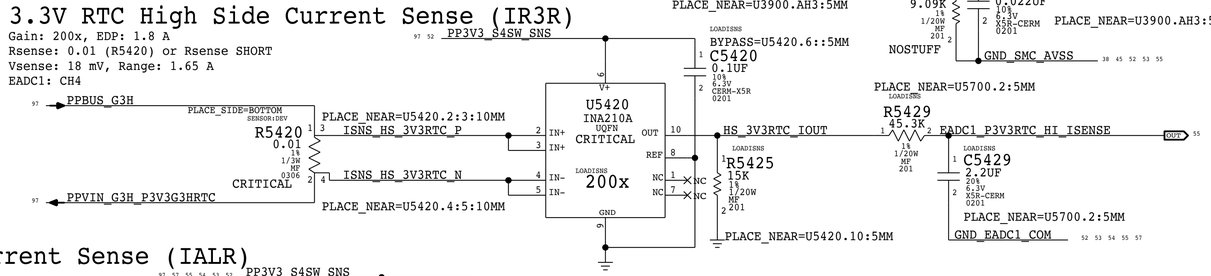

Charger (BMON) Current Sense (IPBR)

Charger Gain: 12x, EDP: 20.83 A
Rsense: 0.005 (R7060)
SMC ADC: 02

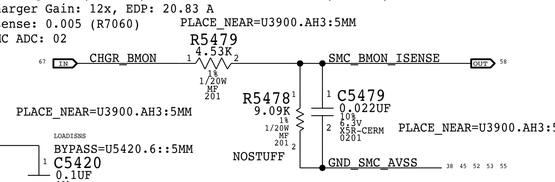

Left AMP Current Sense (IALR)

Gain: 200x, EDP: 2.6 A
Rsense: 0.005 (R54A0) or Rsense SHORT
Vsense: 13 mV, Range: 3.3 A
EADC1: CH1

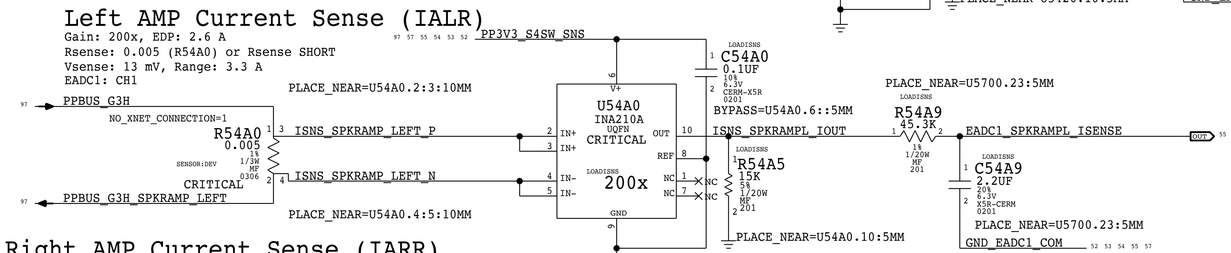

Right AMP Current Sense (IARR)

Gain: 200x, EDP: 2.6 A
Rsense: 0.005 (R54B0) or Rsense SHORT
Vsense: 13 mV, Range: 3.3 A
EADC2: CH6

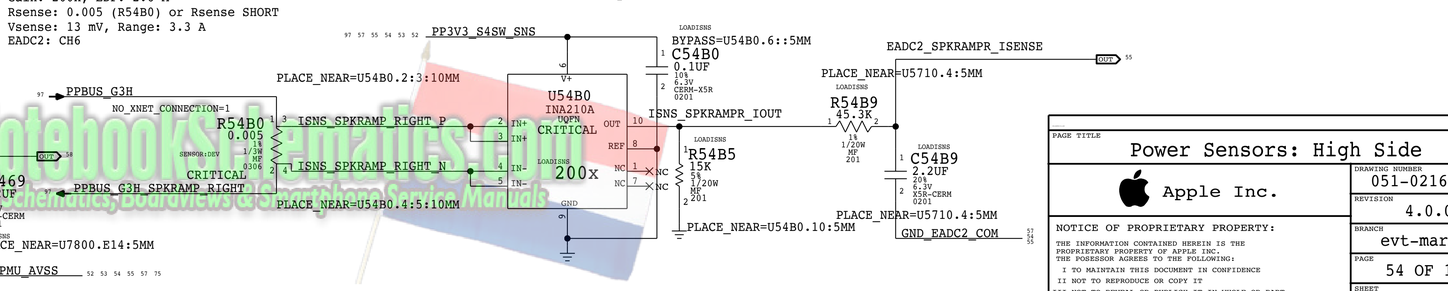

PAGE TITLE
Power Sensors: High Side

Apple Inc.

DRAWING NUMBER	051-02166
SIZE	D
REVISION	4.0.0
BRANCH	evt-mars-0
PAGE	54 OF 150
SHEET	52 OF 108

NOTICE OF PROPRIETARY PROPERTY:
THE INFORMATION CONTAINED HEREIN IS THE PROPRIETARY PROPERTY OF APPLE INC.
THE POSESSOR AGREES TO THE FOLLOWING:
I TO MAINTAIN THIS DOCUMENT IN CONFIDENCE
II NOT TO REPRODUCE OR COPY IT
III NOT TO REVEAL OR PUBLISH IT IN WHOLE OR PART
IV ALL RIGHTS RESERVED

NotebookSchematics.com
Schematics, Boardviews & Smartphone Service Manuals

CPU VCCIO Current Sense (IC1C)

Gain: 200x, EDP: 3.6 A
Rsense: 0.003 (R8102) or Rsense SHORT
Vsense: 10.8 mV, Range: 5 A
MUX: A3

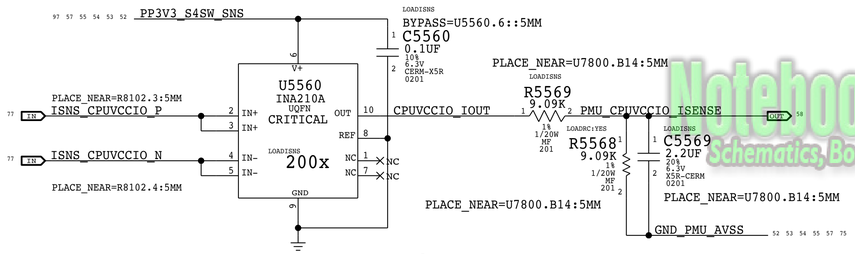

CPU Fixed Current Sense (ICAC)

Gain: 275.74x, EDP: 29 A
Rsense: 2x of 0.00075 (R7310, R7320), Rsum: 0.000375
Vsense: 10.875 mV, Range: 29.01 A
MUX: B7

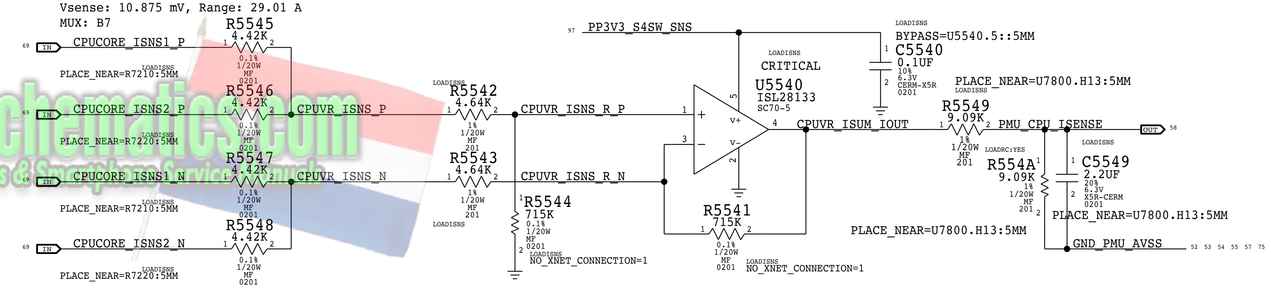

DDR 1.2V S3 (CPU & Memory) Current Sense (IM0C)

Gain: 200x, EDP: 6.9 A
Rsense: 0.002 (R8118) or Rsense SHORT
Vsense: 13.8 mV, Range: 7.5 A
MUX: A4

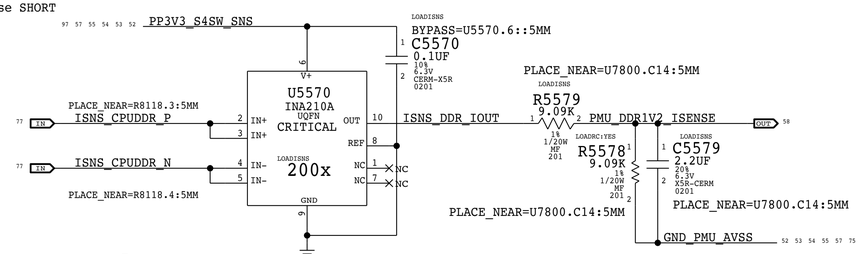

CPU DDR 1.2V S3 (CPU Only) Current Sense (IMCC)

Gain: 200x, EDP: 2.6 A
Rsense: 0.005 (R5510) or Rsense SHORT
Vsense: 13 mV, Range: 3 A
MUX: B2

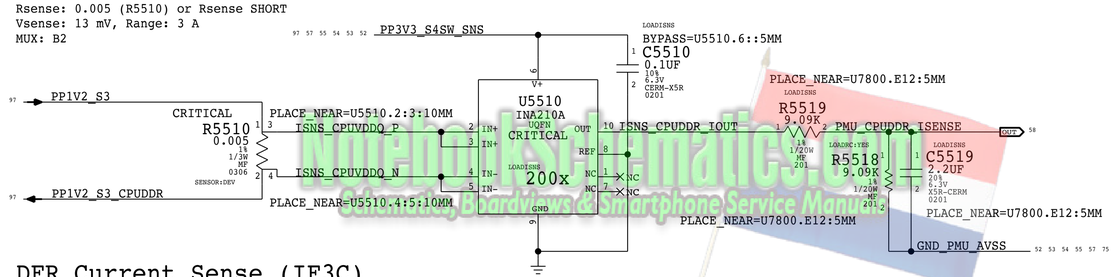

DFR Current Sense (IF3C)

Gain: 200x, EDP: 0.75 A
Rsense: 0.05 (R5520) or Rsense SHORT
Vsense: 37.5 mV, Range: 0.33 A
EADC1: CH3

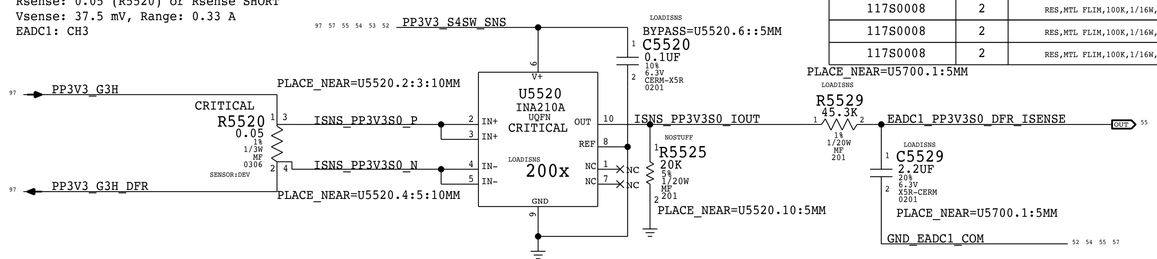

PART NUMBER	QTY	DESCRIPTION	REFERENCE DES	CRITICAL	BOM OPTION
117S0008	2	RES,MTL FLIM,100K,1/16W,0201,SMD,LF	R5568,R5518		LOADRC:NO
117S0008	2	RES,MTL FLIM,100K,1/16W,0201,SMD,LF	R554A,R5578		LOADRC:NO
117S0008	2	RES,MTL FLIM,100K,1/16W,0201,SMD,LF	C5539,R5588		LOADRC:NO

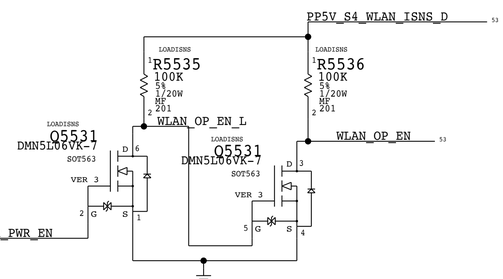

WLANBT 1.8V Current Sense (IW2C)

Gain: 200x. EDP: 0.1 A
Rsense: 0.1 (R5580)
Vsense: 10 mV, Range: 0.13 A
SMC ADC: 06

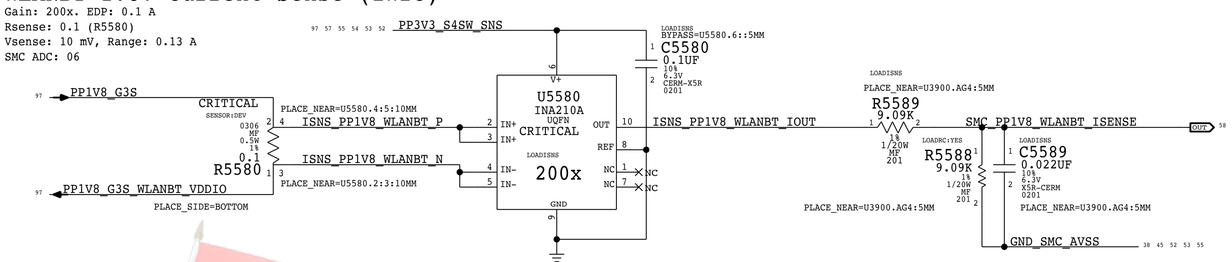

WLANBT 3.3V Current Sense (IW3C)

Gain: 163.3x, EDP: 1.504 A
Rsense: 0.005 (R5530) or Rsense SHORT
Vsense: 7.52 mV, Range: 1.53 A
SMC ADC: 05

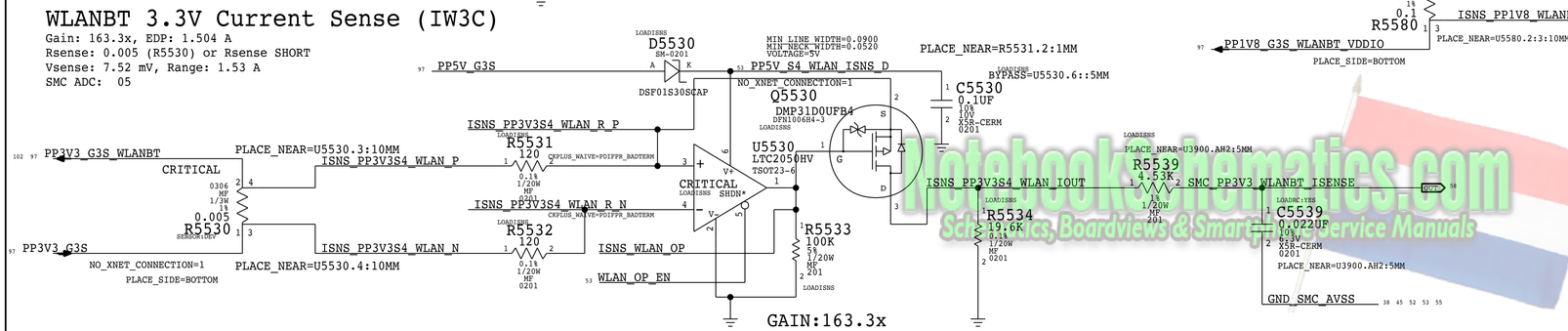

BOM_COST_GROUP=SENSORS

PAGE TITLE: Power Sensors: Load Side

Apple Inc.

DRAWING NUMBER: 051-02166 | SIZE: D
REVISION: 4.0.0
BRANCH: evt-mars-0
PAGE: 55 OF 150
SHEET: 53 OF 108

NOTICE OF PROPRIETARY PROPERTY:
THE INFORMATION CONTAINED HEREIN IS THE PROPRIETARY PROPERTY OF APPLE INC.
THE POSESSOR AGREES TO THE FOLLOWING:
I TO MAINTAIN THIS DOCUMENT IN CONFIDENCE
II NOT TO REPRODUCE OR COPY IT
III NOT TO REVEAL OR PUBLISH IT IN WHOLE OR PART
IV ALL RIGHTS RESERVED

NotebookSchematics.com
Schematics, Boardviews & Smartphone Service Manuals

Keyboard 3V Current Sense (IK3C)

Gain: 200x, EDP: 0.043 A
Rsense: 0.1 (R5690) or Rsense SHORT
Vsense: 4.3 mV, Range: 0.15 A
EADC1: CH6

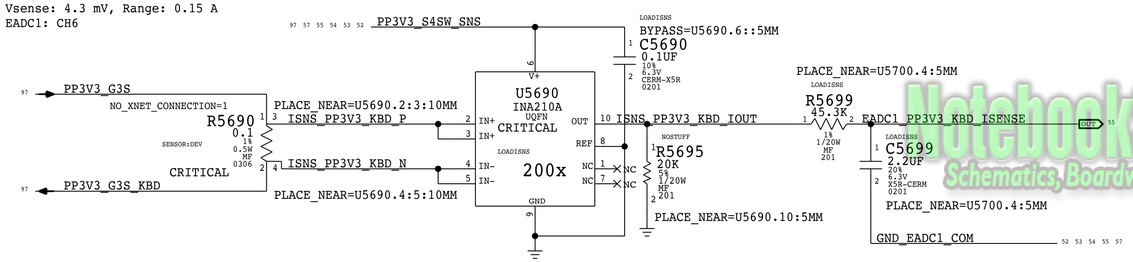

Battery Discrete Current Sense (IB0L)

Gain: 2940x. EDP: 8 A
Rsense: 0.003 (R501//R502)
Vsense: 24 mV, Range: 0.28 A
EADC2: CH5

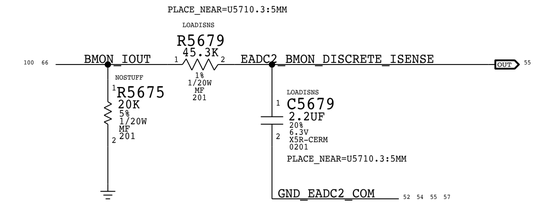

Thunderbolt TBT Current Left (IULC)

Gain: 200x. EDP: 0.8 A
Rsense: 0.025 (R5640) or Rsense SHORT
Vsense: 12.5 mV, Range: 0.66 A
EADC1: CH7

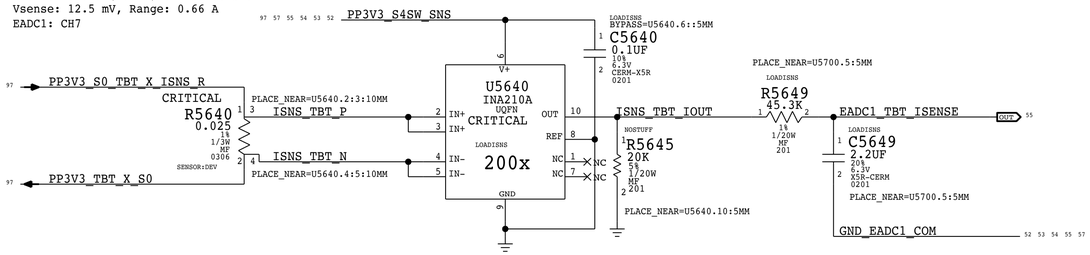

Thunderbolt TBT Current Right (IURC)

Gain: 200x. EDP: 0.8 A
Rsense: 0.025 (R5670) or Rsense SHORT
Vsense: 12.5 mV, Range: 0.66 A
EADC1: CH2

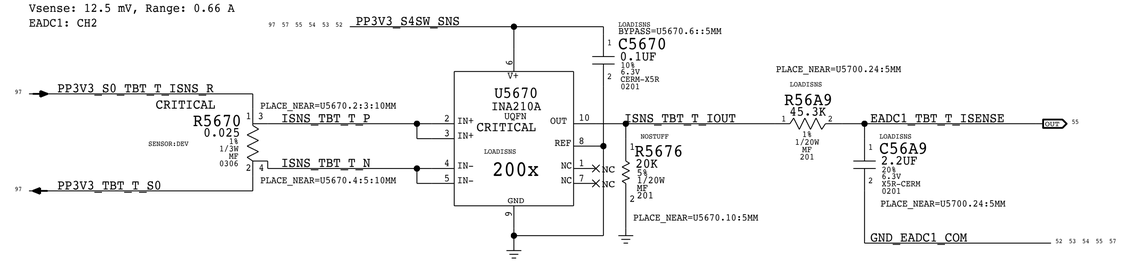

LCD Panel 3V Current Sense (ILDC)

Gain: 200x. EDP: 1 A
RSENSE: 0.01 (R8520) or Rsense SHORT
Vsense: 5 mV, Range: 1.65 A
EADC2: CH0

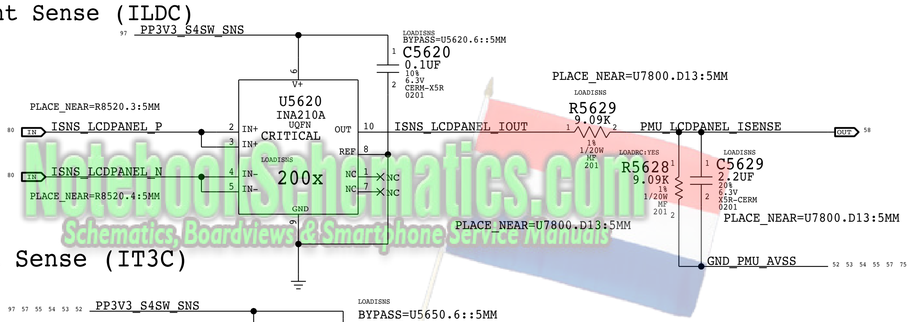

Trackpad 3V Current Sense (IT3C)

Gain: 200x, EDP: 0.05 A
Rsense: 0.1 (R5650) or Rsense SHORT
Vsense: 5 mV, Range: 0.17 A
EADC2: CH1

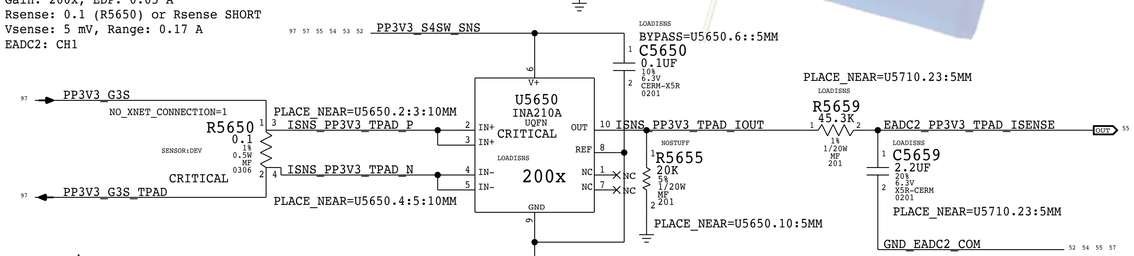

PART NUMBER	QTY	DESCRIPTION	REFERENCE DES	CRITICAL	BOM OPTION
117S0008	2	RES,MTL FLIM,100K,1/16W,0201,SMD,LF	R5698,R5628		LOADRC:NO

CPU GT Voltage Sense (VCGC)

SMC ADC: 21

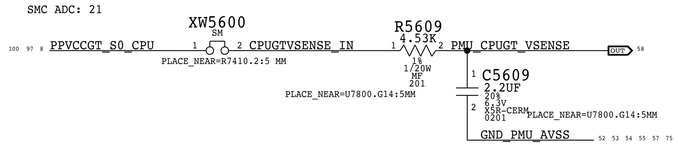

ALS/Camera Current Sense (ICMC)

Gain: 200x. EDP: 0.1 A
Rsense: 0.1 (R5610) or Rsense SHORT
Vsense: 10 mV, Range: 0.17 A
EADC2: CH2

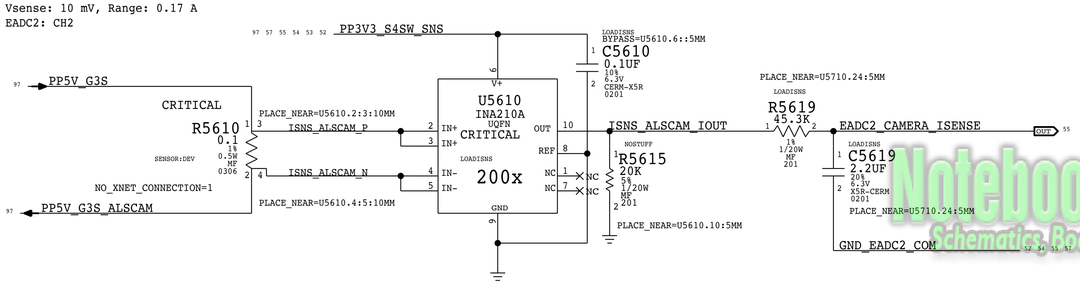

CPU Core Voltage Sense (VCAC)

SMC ADC: 20

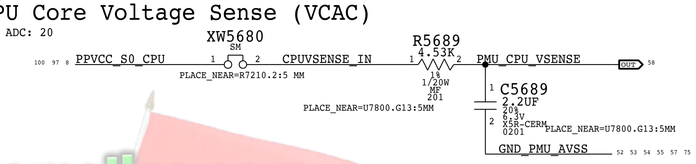

BOM_COST_GROUP=SENSORS

PAGE TITLE: Power Sensors: Extended

Apple Inc.

DRAWING NUMBER: 051-02166 | SIZE: D
REVISION: 4.0.0
BRANCH: evt-mars-0
PAGE: 56 OF 150
SHEET: 54 OF 108

NOTICE OF PROPRIETARY PROPERTY:
THE INFORMATION CONTAINED HEREIN IS THE PROPRIETARY PROPERTY OF APPLE INC.
THE POSESSOR AGREES TO THE FOLLOWING:
I TO MAINTAIN THIS DOCUMENT IN CONFIDENCE
II NOT TO REPRODUCE OR COPY IT
III NOT TO REVEAL OR PUBLISH IT IN WHOLE OR PART
IV ALL RIGHTS RESERVED

NotebookSchematics.com
Schematics, Boardviews & Smartphone Service Manuals

CALPE 3.3V INPUT Current Left (IP3C)

Gain: 200x. EDP: 10.124 A
Rsense: 0.002 (R5780)
Vsense: 20.248 mV, Range: 12.5 A
EADC1: CH7

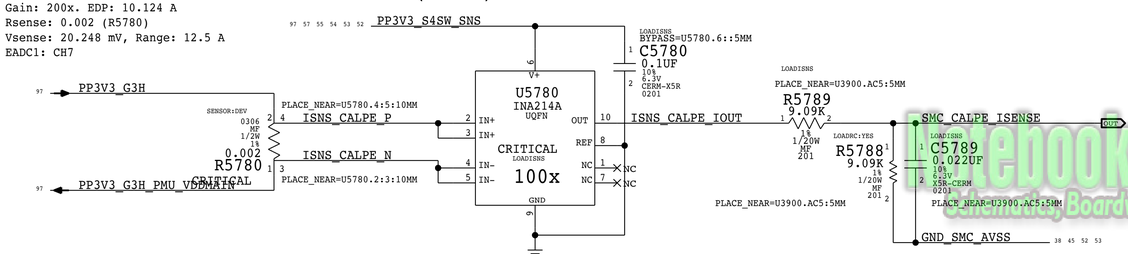

CPU REG.5V Current Sense (IC5C)

Gain: 200x, EDP: 0.42 A
Rsense: 0.025 (R5760)
Vsense: 10.5 mV, Range: 0.6 A
MUX: A7

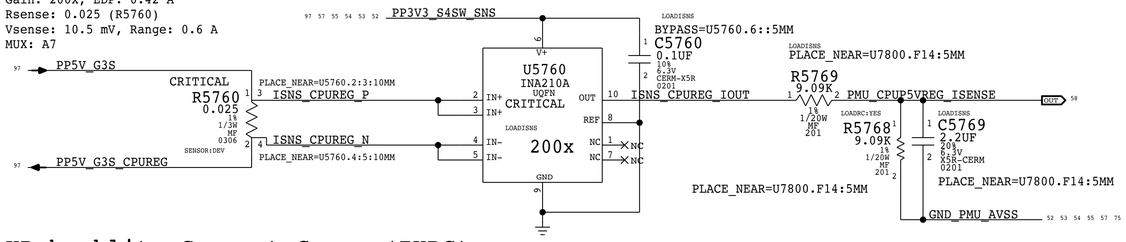

KB backlite Current Sense (IKBC)

Gain: 200x, EDP: 0.17 A
Rsense: 0.05 (R5730)
Vsense: 8.5 mV, Range: 0.33 A
EADC2: CH3

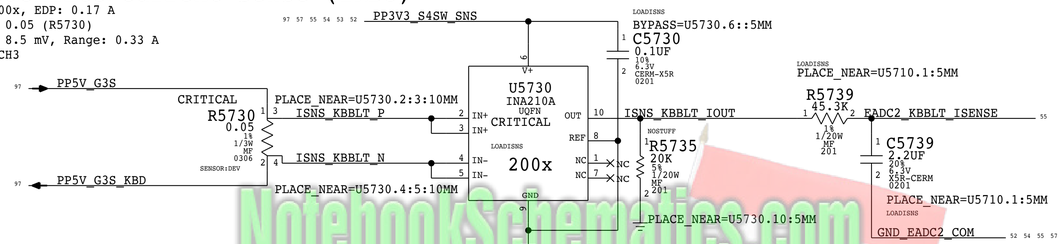

PART NUMBER	QTY	DESCRIPTION	REFERENCE DES	CRITICAL	BOM OPTION
117S0008	2	RES,MTL FLIM,100K,1/16W,0201,SMD,LF	R5768,R5777		LOADRC:NO
117S0008	2	RES,MTL FLIM,100K,1/16W,0201,SMD,LF	R574A,R5788		LOADRC:NO
117S0008	1	RES,MTL FLIM,100K,1/16W,0201,SMD,LF	R5798		LOADRC:NO

CPU GT+GTX Current Sense (ICGC)

Gain: 188.49x, EDP: 64 A
Rsense: 3x of 0.00075 (R7410, R7420, R7430), Rsum: 0.00025
Vsense: 16 mV, Range: 53.05 A
MUX: B6

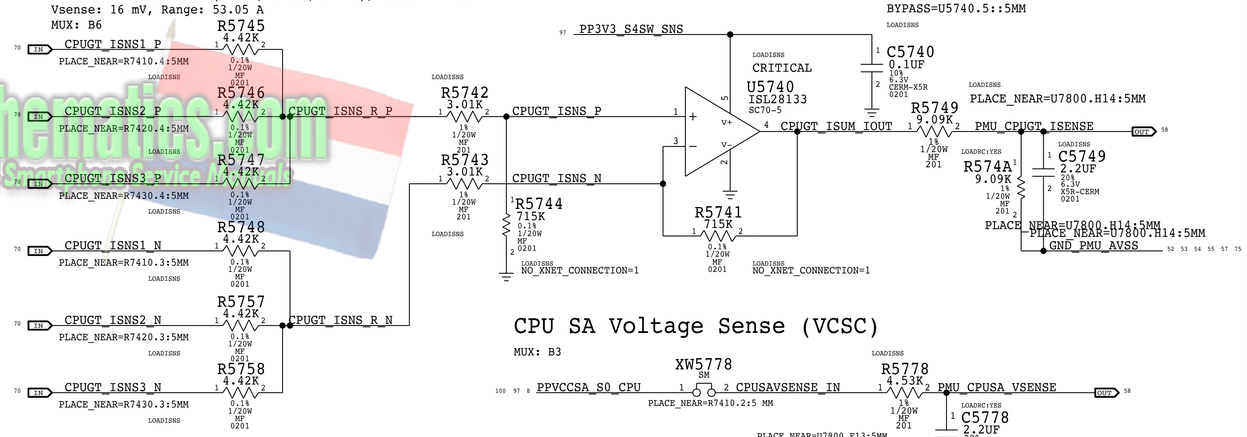

CPU SA Current Sense (ICSC)

Gain: 100x, EDP: 9.5 A
Rsense: 0.002 (R7270)
Vsense: 19 mV, Range: 15 A
MUX: B1

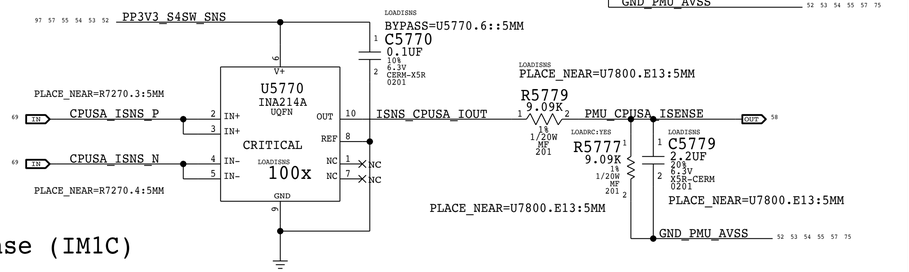

CPU SA Voltage Sense (VCSC)

MUX: B3

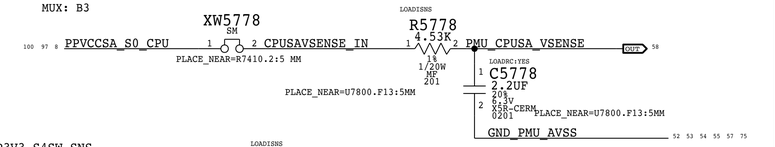

LPDDR 1.8V Current Sense (IM1C)

Gain: 200x, EDP: 0.45 A
Rsense: 0.025 (R5720) or Rsense SHORT
Vsense: 11.25 mV, Range: 0.6 A
MUX: B0

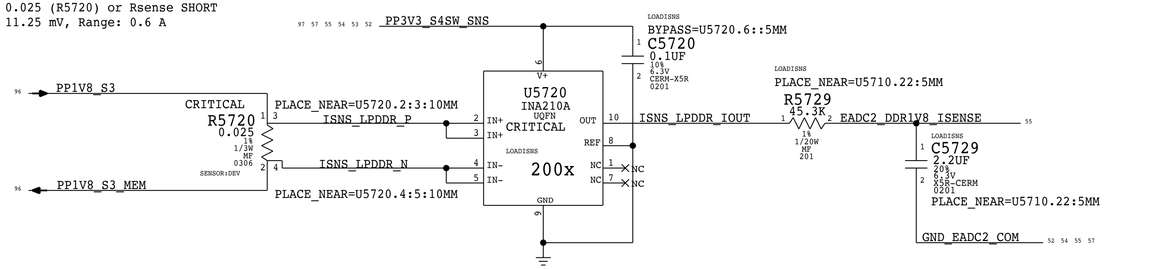

EADC1

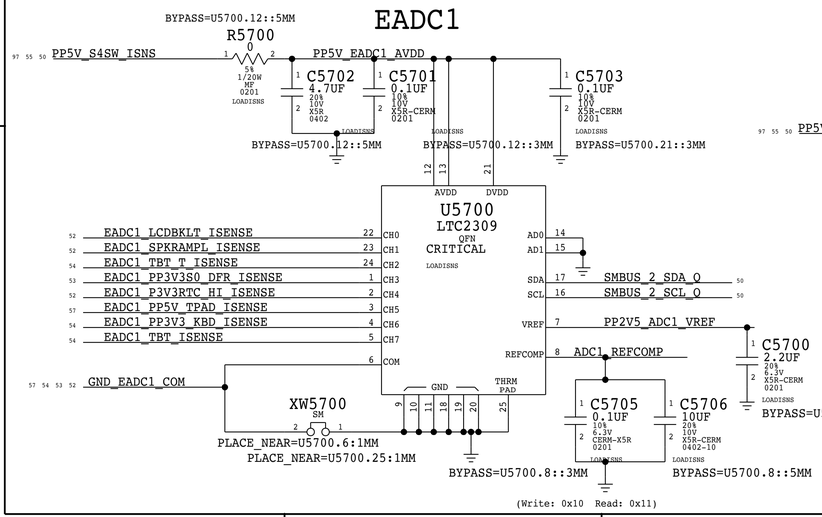

(Write: 0x10 Read: 0x11)

EADC2

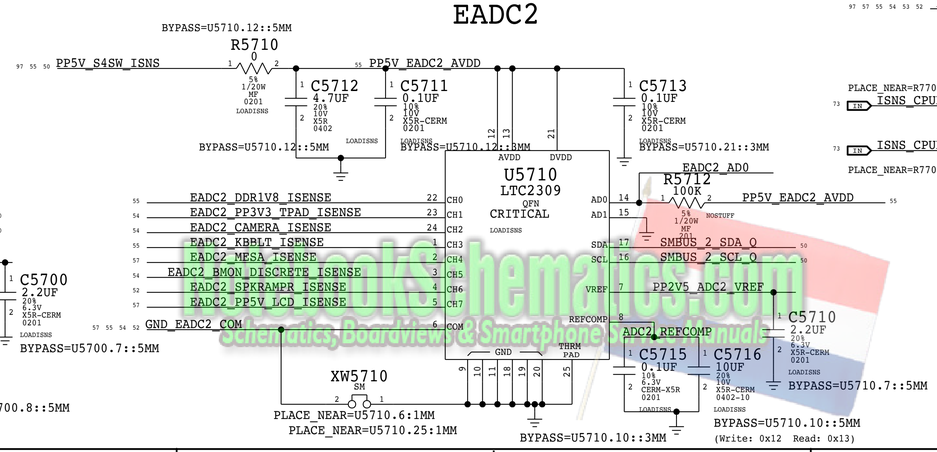

(Write: 0x12 Read: 0x13)

CPU EDRAM Current Sense (ICEC)

Gain: 200x, EDP: 6.2 A
Rsense: 0.002 (R7702) or Rsense SHORT
Vsense: 12.4 mV, Range: 7.5 A
MUX: A2

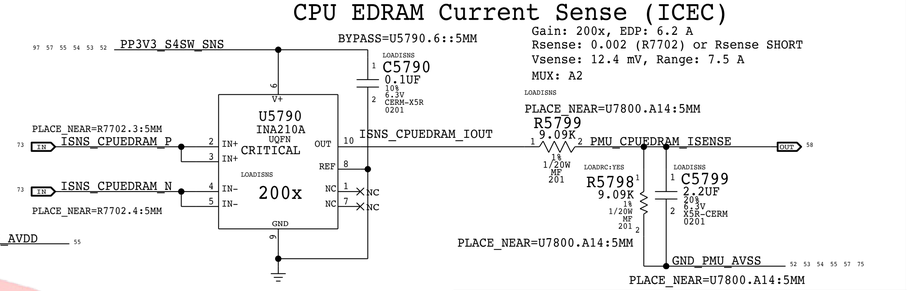

BOM_COST_GROUP=SENSORS

PAGE TITLE	Power Sensors: Extended 2
	Apple Inc.
DRAWING NUMBER	051-02166
SIZE	D
REVISION	4.0.0
BRANCH	evt-mars-0
PAGE	57 OF 150
SHEET	55 OF 108

NOTICE OF PROPRIETARY PROPERTY:
THE INFORMATION CONTAINED HEREIN IS THE PROPRIETARY PROPERTY OF APPLE INC.
THE POSESSOR AGREES TO THE FOLLOWING:
I TO MAINTAIN THIS DOCUMENT IN CONFIDENCE
II NOT TO REPRODUCE OR COPY IT
III NOT TO REVEAL OR PUBLISH IT IN WHOLE OR PART
IV ALL RIGHTS RESERVED

NotebookSchematics.com
Schematics, Boardviews & Smartphone Service Manuals

Thermal Sensor A: Thunderbolt Die, Airflow Left

I2C Write: 0xD8, I2C Read: 0xD9

Thermal Diode: TBT Die (TTLD)

Placement Note:
The P leg connects to THERMDA pin of the TBT chip, the N leg connect to pin AC22.

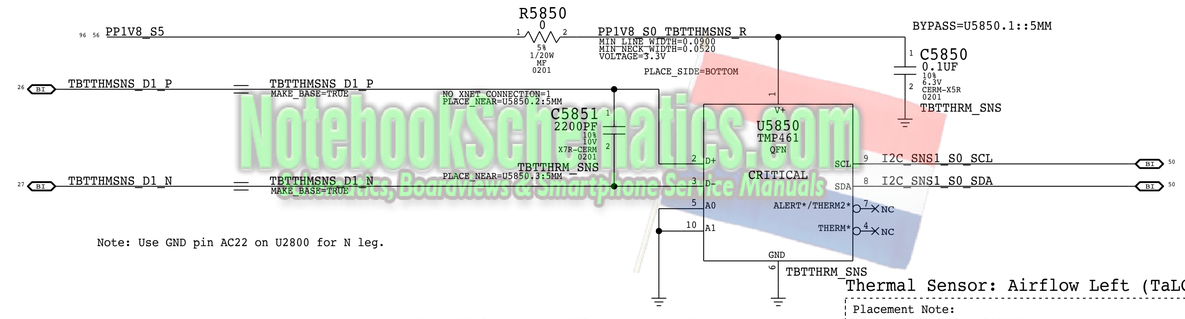

Note: Use GND pin AC22 on U2800 for N leg.

U5850 I2C Address: TMP461 is 0x90/0x91.

Thermal Sensor: Airflow Left (TaLC)

Placement Note:
Place U5860 on the BOTTOM side, at the lower corner near left fan.

Thermal Sensor C: Thunderbolt Die, Air Flow Right

I2C Write: 0xB8, I2C Read: 0xB9

Thermal Diode: TBT Die (TTRD)

Placement Note:
The P leg connects to THERMDA pin of the TBT chip, the N leg connect to pin AC22.

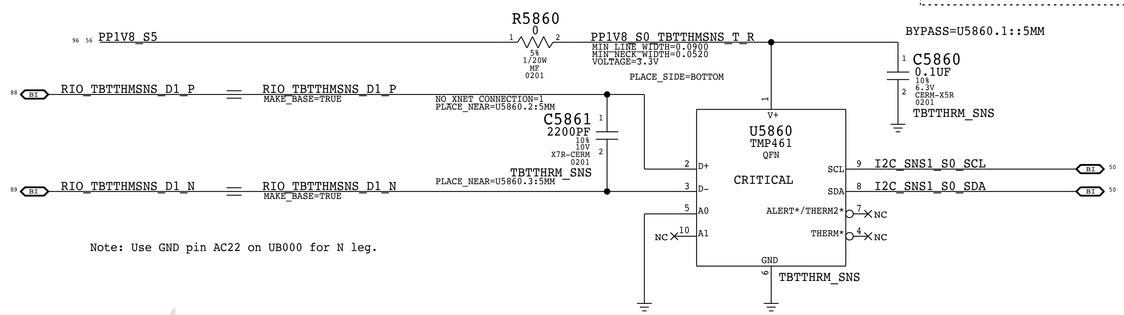

Note: Use GND pin AC22 on UB000 for N leg.

U5860 I2C Address: TMP461 is 0x96/0x97.

Thermal Sensor: Airflow Right (TaRC)

Placement Note:
Place U5860 on the BOTTOM side, at the lower corner near right fan.

Thermal Sensor B & CPU High Peak Detection: CPU Proximity, Memory Proximity, Fin Stack Left, Fin Stack Right

I2C Write: 0xB8, I2C Read: 0xB9

Thermal Diode: Fin Stack Left (Th2H)

Placement Note:
Place Q5871, Airflow thermal indicator, above the X100, on the TOP side.

Thermal Diode: CPU Proximity (TC0P)

Placement Note:
Place Q5872 under the CPU, on the TOP side.

Thermal Diode: Memory Proximity (TM0P)

Placement Note:
Place Q5873 between two rows of Memory devices, between channel A and B, on the BOTTOM side.

HARPOON PROXIMITY (TW0P)

Placement note:
PLACE Q5874 ON BOTTOM NEAR HARPOON

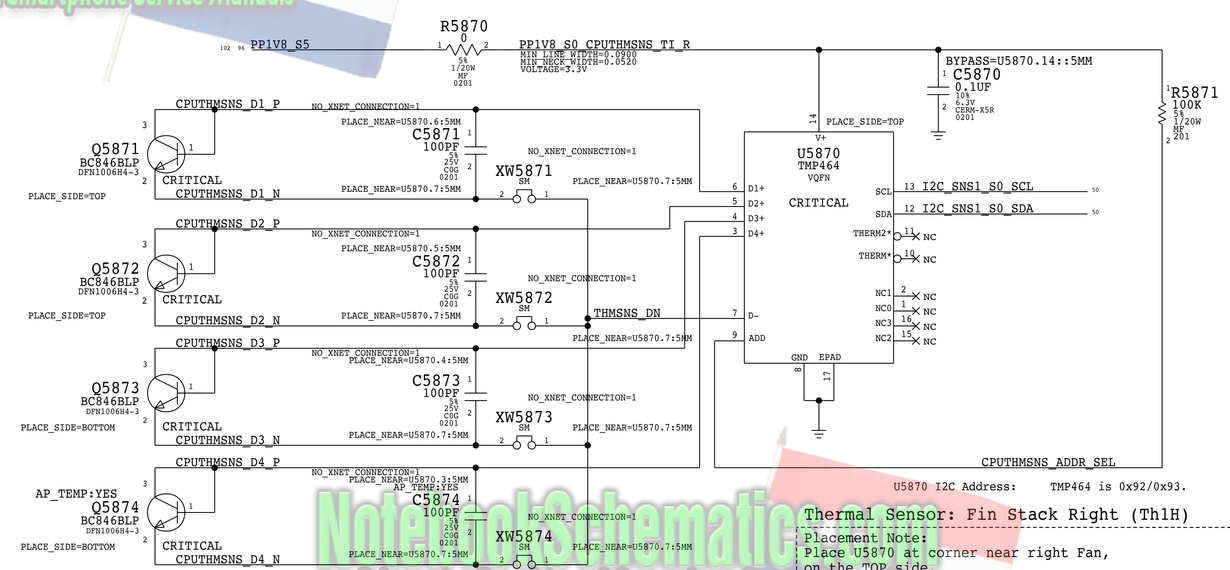

U5870 I2C Address: TMP464 is 0x92/0x93.

Thermal Sensor: Fin Stack Right (Th1H)

Placement Note:
Place U5870 at corner near right Fan, on the TOP side.

PART NUMBER	QTY	DESCRIPTION	REFERENCE DES	CRITICAL	BOM OPTION
117S0002	1	RES,MTL FLIM,0ohm,1/20W,0201,SMD,LF	C5874		AP_TEMP:NO

BOM_COST_GROUP=SENSORS

PAGE TITLE: Thermal Sensors

Apple Inc.

DRAWING NUMBER: 051-02166 SIZE: D

REVISION: 4.0.0

BRANCH: evt-mars-0

PAGE: 58 OF 150

SHEET: 56 OF 108

NOTICE OF PROPRIETARY PROPERTY:
THE INFORMATION CONTAINED HEREIN IS THE PROPRIETARY PROPERTY OF APPLE INC.
THE POSESSOR AGREES TO THE FOLLOWING:
I TO MAINTAIN THIS DOCUMENT IN CONFIDENCE
II NOT TO REPRODUCE OR COPY IT
III NOT TO REVEAL OR PUBLISH IT IN WHOLE OR PART
IV ALL RIGHTS RESERVED

NotebookSchematics.com
Schematics, Boardviews & Smartphone Service Manuals

Trackpad 5V Current Sense (IT5C)

Gain: 200x, EDP: 0.0055 A
Rsense: 0.1 (R5940) or Rsense SHORT
Vsense: 0.55 mV, Range: 0.17 A
EADC1: CH6

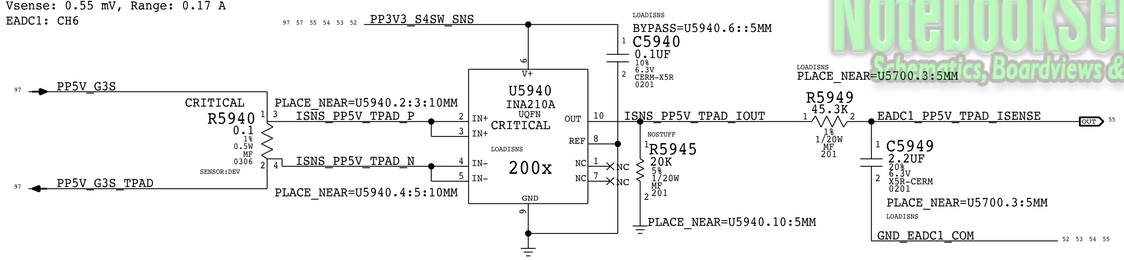

LCD Panel 5V Current Sense (IL5C)

Gain: 200x, EDP: 0.1 A
Rsense: 0.1 (R5960) or Rsense SHORT
Vsense: 10 mV, Range: 0.17 A
EADC1: CH7

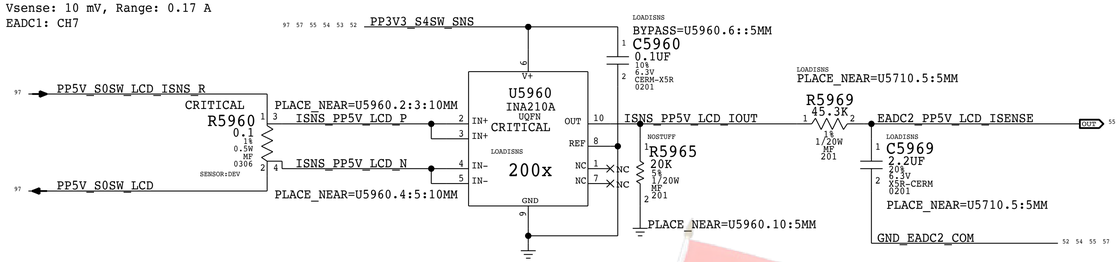

Ocarina Current Sense (IHCC)

Gain: 200x, EDP: 1.1 A
Rsense: 0.01 (R5920) or Rsense SHORT
Vsense: 11 mV, Range: 1.5 A
MUX: A5

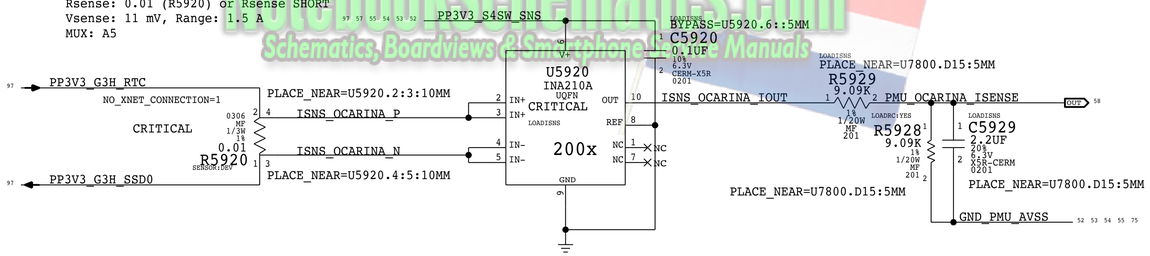

MESA Current Sense (IIDC)

Gain: 200x, EDP: 0.176 A
Rsense: 0.050 (R5530) or Rsense SHORT
Vsense: 8.8 mV, Range: 0.33 A
EADC2: CH4

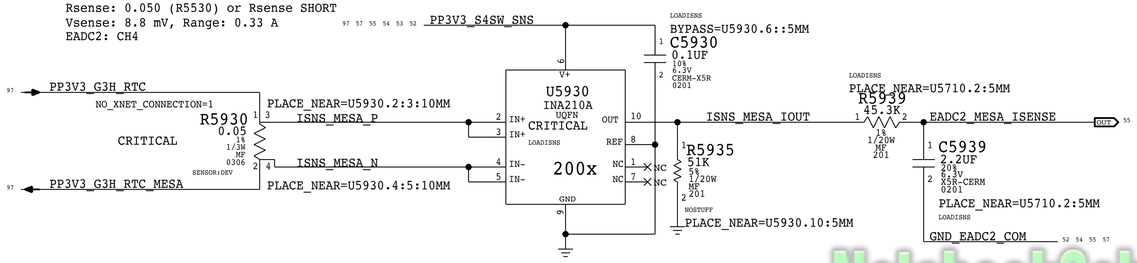

EADC Current Sense

EDP: 6m A
Rsense: 0.1 (R5950) or Rsense SHORT
Vsense: 0.6 mV

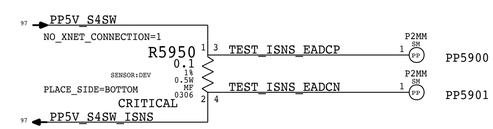

PART NUMBER	QTY	DESCRIPTION	REFERENCE DES	CRITICAL	BOM OPTION
117S0008	2	RES,MTL FLIM,100K,1/16W,0201,SMD,LF	R5928,R5958		LOADRC:NO

BOM_COST_GROUP=SENSORS

PAGE TITLE: Power Sensors:Extended 3

Apple Inc.

DRAWING NUMBER: 051-02166 | SIZE: D
REVISION: 4.0.0
BRANCH: evt-mars-0
PAGE: 59 OF 150
SHEET: 57 OF 108

NOTICE OF PROPRIETARY PROPERTY:
THE INFORMATION CONTAINED HEREIN IS THE PROPRIETARY PROPERTY OF APPLE INC.
THE POSESSOR AGREES TO THE FOLLOWING:
I TO MAINTAIN THIS DOCUMENT IN CONFIDENCE
II NOT TO REPRODUCE OR COPY IT
III NOT TO REVEAL OR PUBLISH IT IN WHOLE OR PART
IV ALL RIGHTS RESERVED

NotebookSchematics.com
Schematics, Boardviews & Smartphone Service Manuals

FAN CONTROL

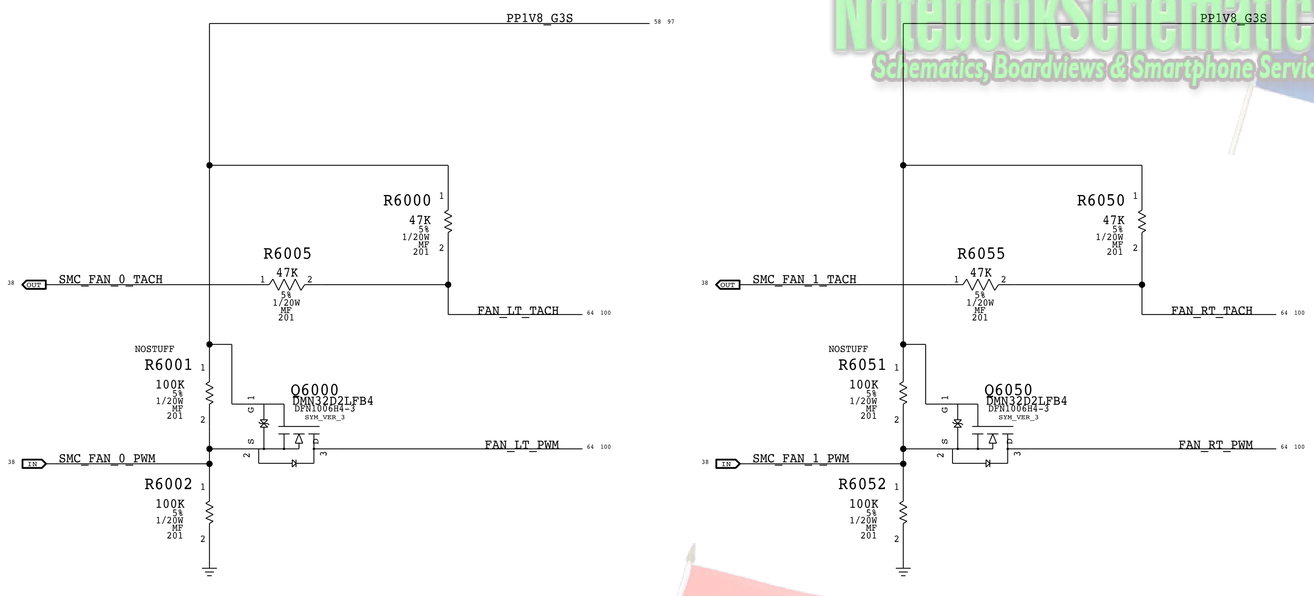

FOR DEBUG FAN POWER

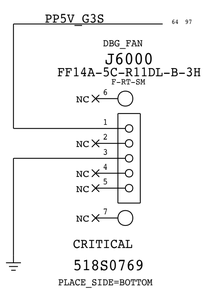

SMC ADC Assignments

SMC_CPU_HS_ISENSE (MAKE_BASE=TRUE)	SMC_CPU_HS_ISENSE	52 IN	38 OUT
SMC_PBUS_VSENSE (MAKE_BASE=TRUE)	SMC_PBUS_VSENSE	52 IN	38 OUT
SMC_BMON_ISENSE (MAKE_BASE=TRUE)	SMC_BMON_ISENSE	52 IN	38 OUT
SMC_DCIN_ISENSE (MAKE_BASE=TRUE)	SMC_DCIN_ISENSE	52 IN	38 OUT
SMC_DCIN_VSENSE (MAKE_BASE=TRUE)	SMC_DCIN_VSENSE	52 IN	38 OUT
SMC_PP3V3_WLANBT_ISENSE (MAKE_BASE=TRUE)	SMC_PP3V3_WLANBT_ISENSE	53 IN	38 OUT
SMC_PP1V8_WLANBT_ISENSE (MAKE_BASE=TRUE)	SMC_PP1V8_WLANBT_ISENSE	53 IN	38 OUT
SMC_CALPE_ISENSE (MAKE_BASE=TRUE)	SMC_CALPE_ISENSE	55 IN	38 OUT

KBL-U NB Assignments

CPUGT ISNS	ADC5
IACORE ISNS	ADC6

Desktop Assignments

GPU_AUX	ADC0
GPU_CORE	ADC1
12V VSNS	ADC2
12V ISNS	ADC3
Same	ADC4-7

PMU ADC Assignments

PMU_OTHER3V3_HI_ISENSE (MAKE_BASE=TRUE)	PMU_OTHER3V3_HI_ISENSE	52 IN	76 OUT
PMU_OTHER5V_HI_ISENSE (MAKE_BASE=TRUE)	PMU_OTHER5V_HI_ISENSE	52 IN	76 OUT
PMU_CPUEDRAM_ISENSE (MAKE_BASE=TRUE)	PMU_CPUEDRAM_ISENSE	55 IN	76 OUT
PMU_CPUVCCIO_ISENSE (MAKE_BASE=TRUE)	PMU_CPUVCCIO_ISENSE	53 IN	76 OUT
PMU_DDR1V2_ISENSE (MAKE_BASE=TRUE)	PMU_DDR1V2_ISENSE	53 IN	76 OUT
PMU_OCARINA_ISENSE (MAKE_BASE=TRUE)	PMU_OCARINA_ISENSE	57 IN	76 OUT
PMU_SSDNAND_ISENSE (MAKE_BASE=TRUE)	PMU_SSDNAND_ISENSE	52 IN	76 OUT
PMU_CPUP5VREG_ISENSE (MAKE_BASE=TRUE)	PMU_CPUP5VREG_ISENSE	55 IN	76 OUT
NC_PMU_AMUX_AY (MAKE_BASE=TRUE)	NC_PMU_AMUX_AY		76 OUT
PMU_LCDPANEL_ISENSE (MAKE_BASE=TRUE)	PMU_LCDPANEL_ISENSE	54 IN	76 OUT
PMU_CPUSA_ISENSE (MAKE_BASE=TRUE)	PMU_CPUSA_ISENSE	55 IN	76 OUT
PMU_CPUDDR_ISENSE (MAKE_BASE=TRUE)	PMU_CPUDDR_ISENSE	53 IN	76 OUT
PMU_CPUSA_VSENSE (MAKE_BASE=TRUE)	PMU_CPUSA_VSENSE	55 IN	76 OUT
PMU_CPU_VSENSE (MAKE_BASE=TRUE)	PMU_CPU_VSENSE	54 IN	76 OUT
PMU_CPUGT_VSENSE (MAKE_BASE=TRUE)	PMU_CPUGT_VSENSE	54 IN	76 OUT
PMU_CPUGT_ISENSE (MAKE_BASE=TRUE)	PMU_CPUGT_ISENSE	55 IN	76 OUT
PMU_CPU_ISENSE (MAKE_BASE=TRUE)	PMU_CPU_ISENSE	53 IN	76 OUT
NC_PMU_AMUX_BY (MAKE_BASE=TRUE)	NC_PMU_AMUX_BY		76 OUT

BOM_COST_GROUP=FAN

PAGE TITLE
Fans/SMC/AMUX Support

Apple Inc.

DRAWING NUMBER 051-02166
SIZE D
REVISION 4.0.0
BRANCH evt-mars-0
PAGE 60 OF 150
SHEET 58 OF 108

NOTICE OF PROPRIETARY PROPERTY:
THE INFORMATION CONTAINED HEREIN IS THE PROPRIETARY PROPERTY OF APPLE INC.
THE POSESSOR AGREES TO THE FOLLOWING:
I TO MAINTAIN THIS DOCUMENT IN CONFIDENCE
II NOT TO REPRODUCE OR COPY IT
III NOT TO REVEAL OR PUBLISH IT IN WHOLE OR PART
IV ALL RIGHTS RESERVED

NotebookSchematics.com
Schematics, Boardviews & Smartphone Service Manuals

NotebookSchematics.com
Schematics, Boardviews & Smartphone Service Manuals

DESIGN: X502/DEV MLB U
LAST CHANGE: Wed Feb 18 17:12:24 2015

PAGE TITLE

Audio Placeholder

Apple Inc.

DRAWING NUMBER	051-02166
SIZE	D
REVISION	4.0.0
BRANCH	evt-mars-0
PAGE	62 OF 150
SHEET	59 OF 108

NOTICE OF PROPRIETARY PROPERTY:
THE INFORMATION CONTAINED HEREIN IS THE PROPRIETARY PROPERTY OF APPLE INC.
THE POSESSOR AGREES TO THE FOLLOWING:
I TO MAINTAIN THIS DOCUMENT IN CONFIDENCE
II NOT TO REPRODUCE OR COPY IT
III NOT TO REVEAL OR PUBLISH IT IN WHOLE OR PART
IV ALL RIGHTS RESERVED

BOM_COST_GROUP=AUDIO

AUDIO JACK CODEC I2C ADDRESS		
AD1	AD0	ADDRESS
GND	GND	0x48 <--
GND	1.8V	0x49
1.8V	GND	0x4A
1.8V	1.8V	0x4B

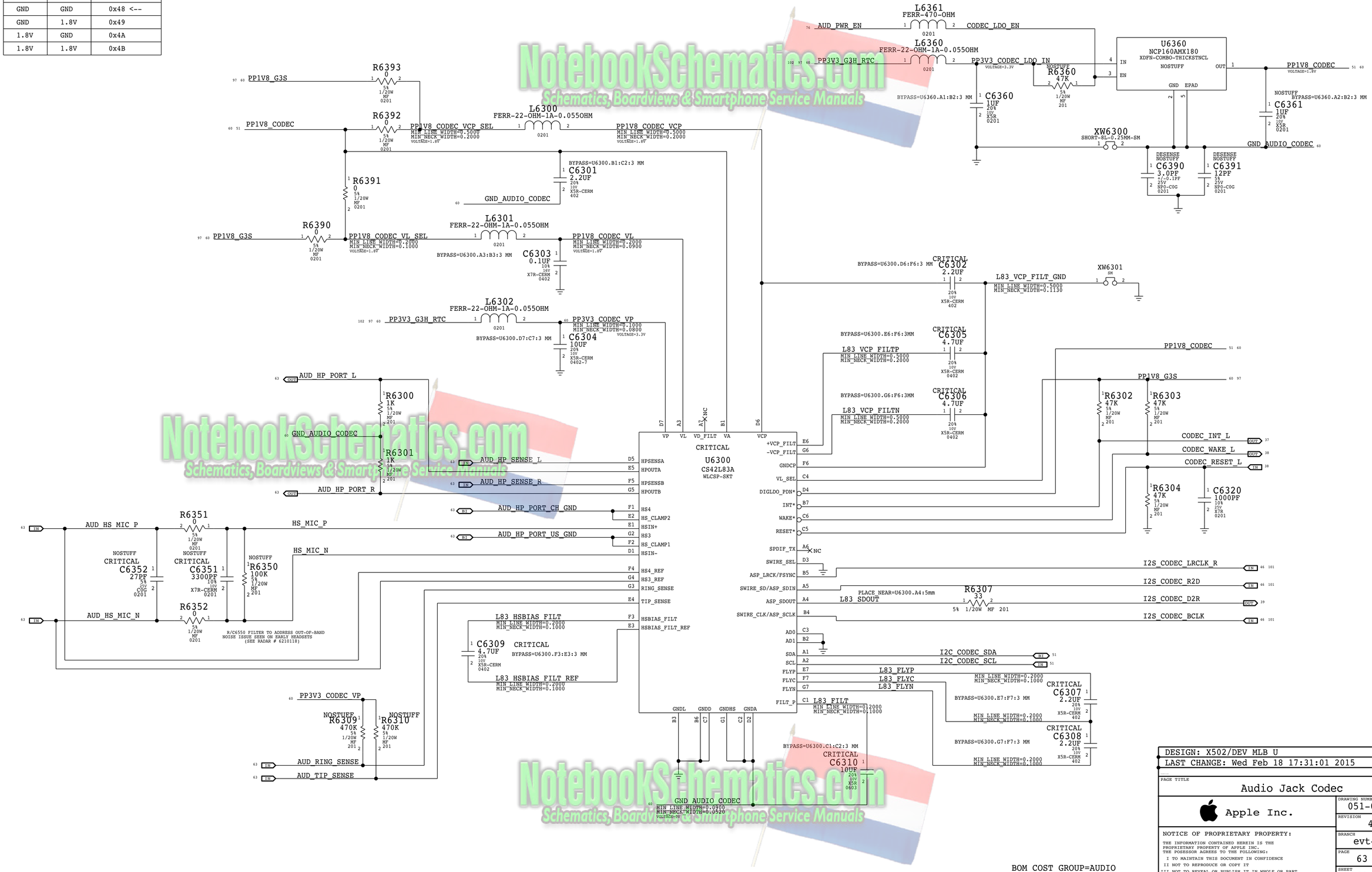

DESIGN: X502/DEV MLB U
LAST CHANGE: Wed Feb 18 17:31:01 2015

PAGE TITLE
Audio Jack Codec

Apple Inc.

DRAWING NUMBER 051-02166 SIZE D
REVISION 4.0.0
BRANCH evt-mars-0
PAGE 63 OF 150
SHEET 60 OF 108

NOTICE OF PROPRIETARY PROPERTY:
THE INFORMATION CONTAINED HEREIN IS THE PROPRIETARY PROPERTY OF APPLE INC.
THE POSESSOR AGREES TO THE FOLLOWING:
I TO MAINTAIN THIS DOCUMENT IN CONFIDENCE
II NOT TO REPRODUCE OR COPY IT
III NOT TO REVEAL OR PUBLISH IT IN WHOLE OR PART
IV ALL RIGHTS RESERVED

2X MONO SPEAKER LEFT AMPLIFIERS

APN: 353S01252
GAIN: 0DBFS = xxVRMS

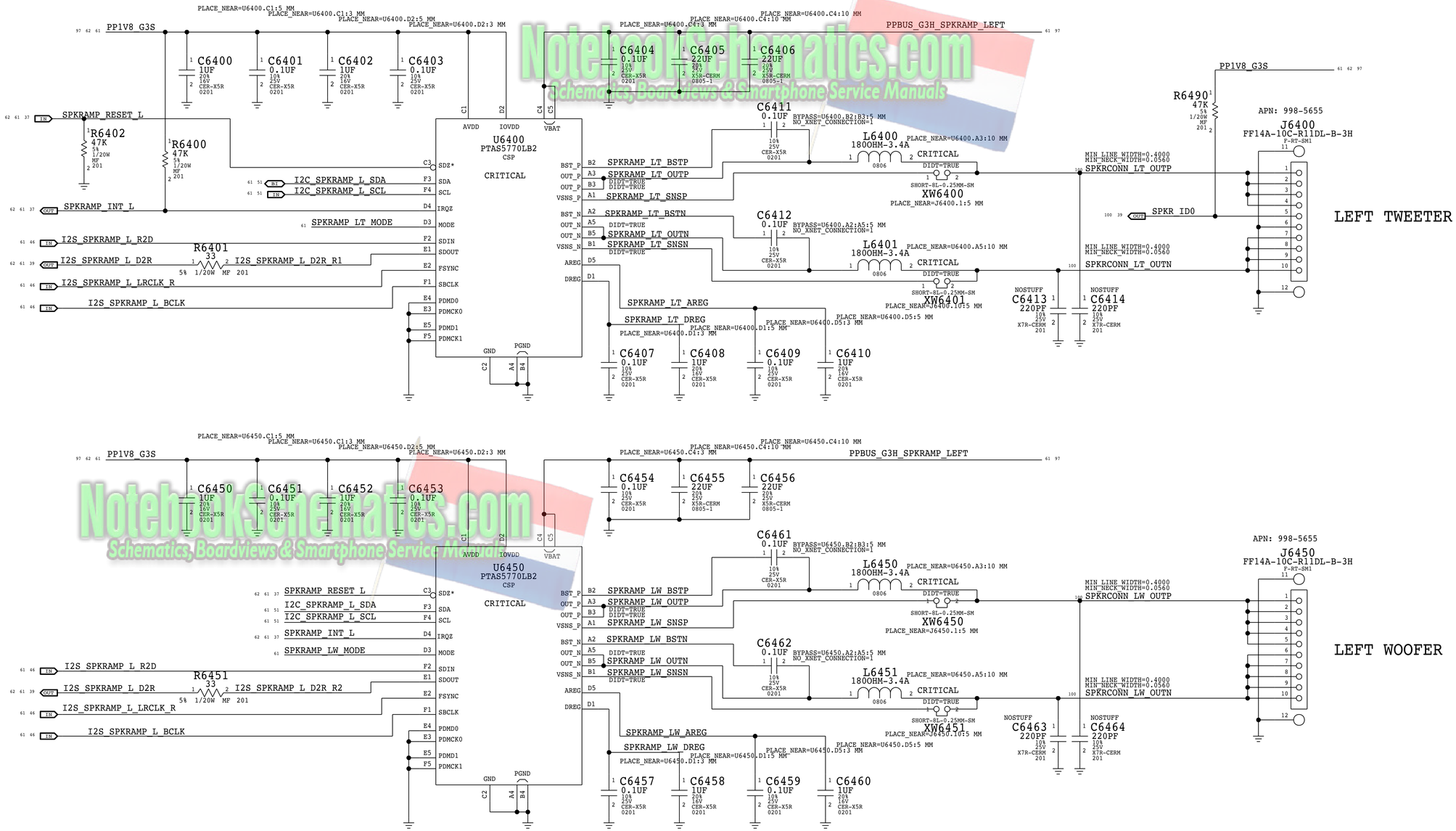

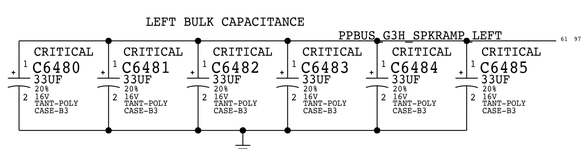

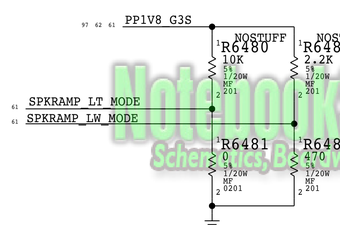

MODE PIN	I2C ADDR	CHANNEL
GND	0x31	L TW
470 to GND	0x32	L WF
470 to IOVDD	0x33	R TW
2k2 to GND	0x34	R WF
2k2 to IOVDD	0x35	
10k to GND	0x36	
10k to IOVDD	0x37	
47k to IOVDD	0x38	

BOM_COST_GROUP=AUDIO

PAGE TITLE
Audio Left Amplifiers

Apple Inc.

DRAWING NUMBER 051-02166 SIZE D
REVISION 4.0.0
BRANCH evt-mars-0
PAGE 64 OF 150
SHEET 61 OF 108

NOTICE OF PROPRIETARY PROPERTY:
THE INFORMATION CONTAINED HEREIN IS THE PROPRIETARY PROPERTY OF APPLE INC.
THE POSESSOR AGREES TO THE FOLLOWING:
I TO MAINTAIN THIS DOCUMENT IN CONFIDENCE
II NOT TO REPRODUCE OR COPY IT
III NOT TO REVEAL OR PUBLISH IT IN WHOLE OR PART
IV ALL RIGHTS RESERVED

NotebookSchematics.com
Schematics, Boardviews & Smartphone Service Manuals

2X MONO SPEAKER RIGHT AMPLIFIERS

APN: 353S01252
GAIN: 0DBFS = xxVRMS

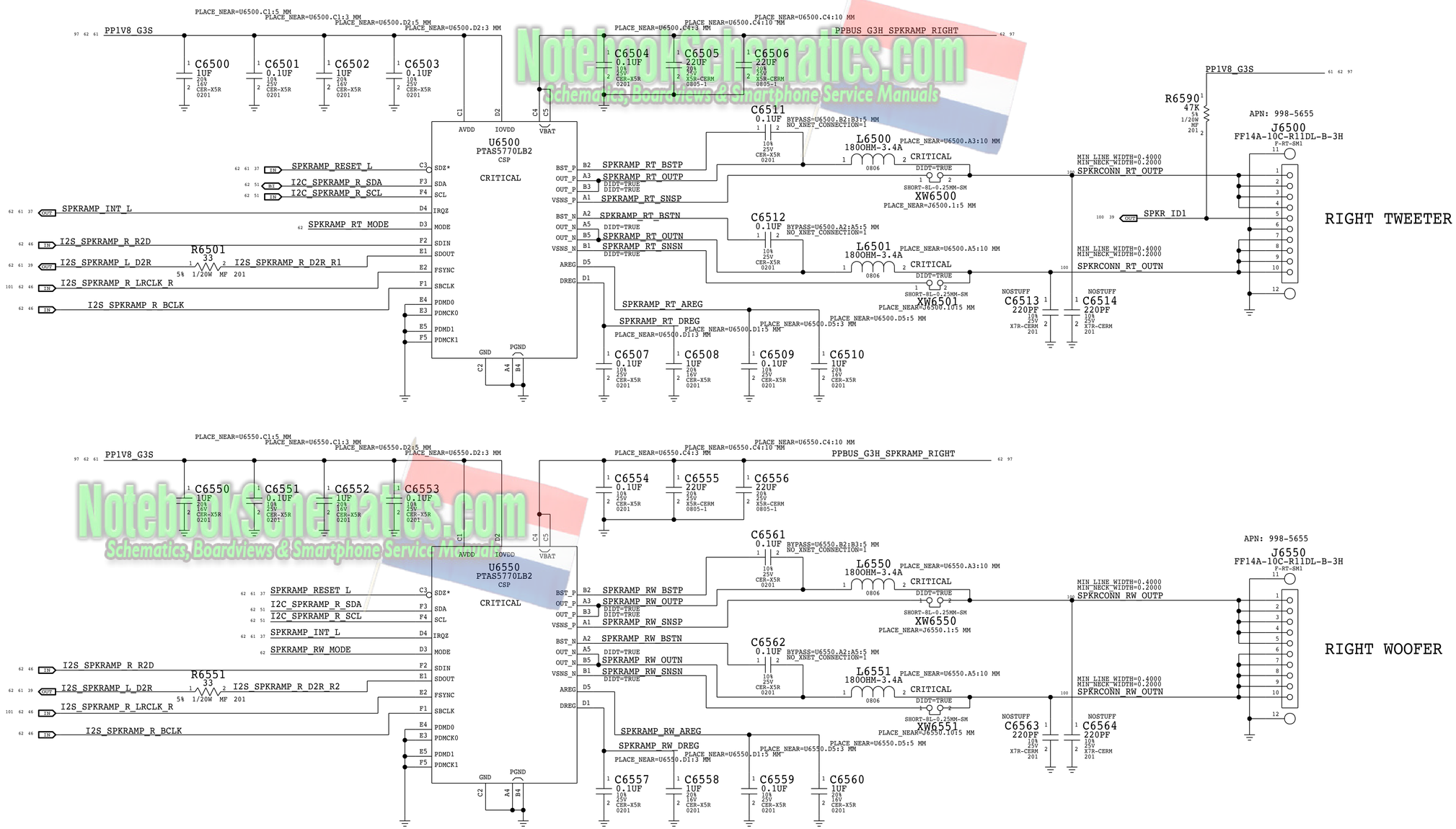

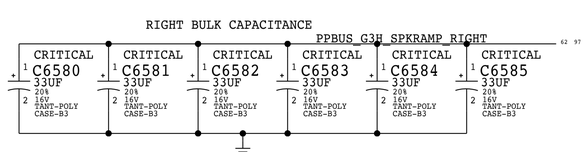

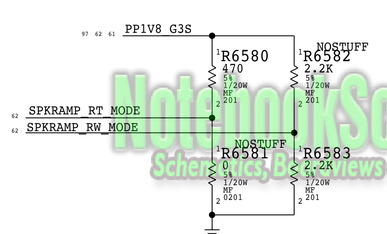

MODE PIN	I2C ADDR	CHANNEL
GND	0x31	L TW
470 to GND	0x32	L WF
470 to IOVDD	0x33	R TW
2k2 to GND	0x34	R WF
2k2 to IOVDD	0x35	
10k to GND	0x36	
10k to IOVDD	0x37	
47k to IOVDD	0x38	

BOM_COST_GROUP=AUDIO

PAGE TITLE
Audio Right Amplifiers

Apple Inc.

DRAWING NUMBER 051-02166 SIZE D
REVISION 4.0.0
BRANCH evt-mars-0
PAGE 65 OF 150
SHEET 62 OF 108

NOTICE OF PROPRIETARY PROPERTY:
THE INFORMATION CONTAINED HEREIN IS THE PROPRIETARY PROPERTY OF APPLE INC.
THE POSESSOR AGREES TO THE FOLLOWING:
I TO MAINTAIN THIS DOCUMENT IN CONFIDENCE
II NOT TO REPRODUCE OR COPY IT
III NOT TO REVEAL OR PUBLISH IT IN WHOLE OR PART
IV ALL RIGHTS RESERVED

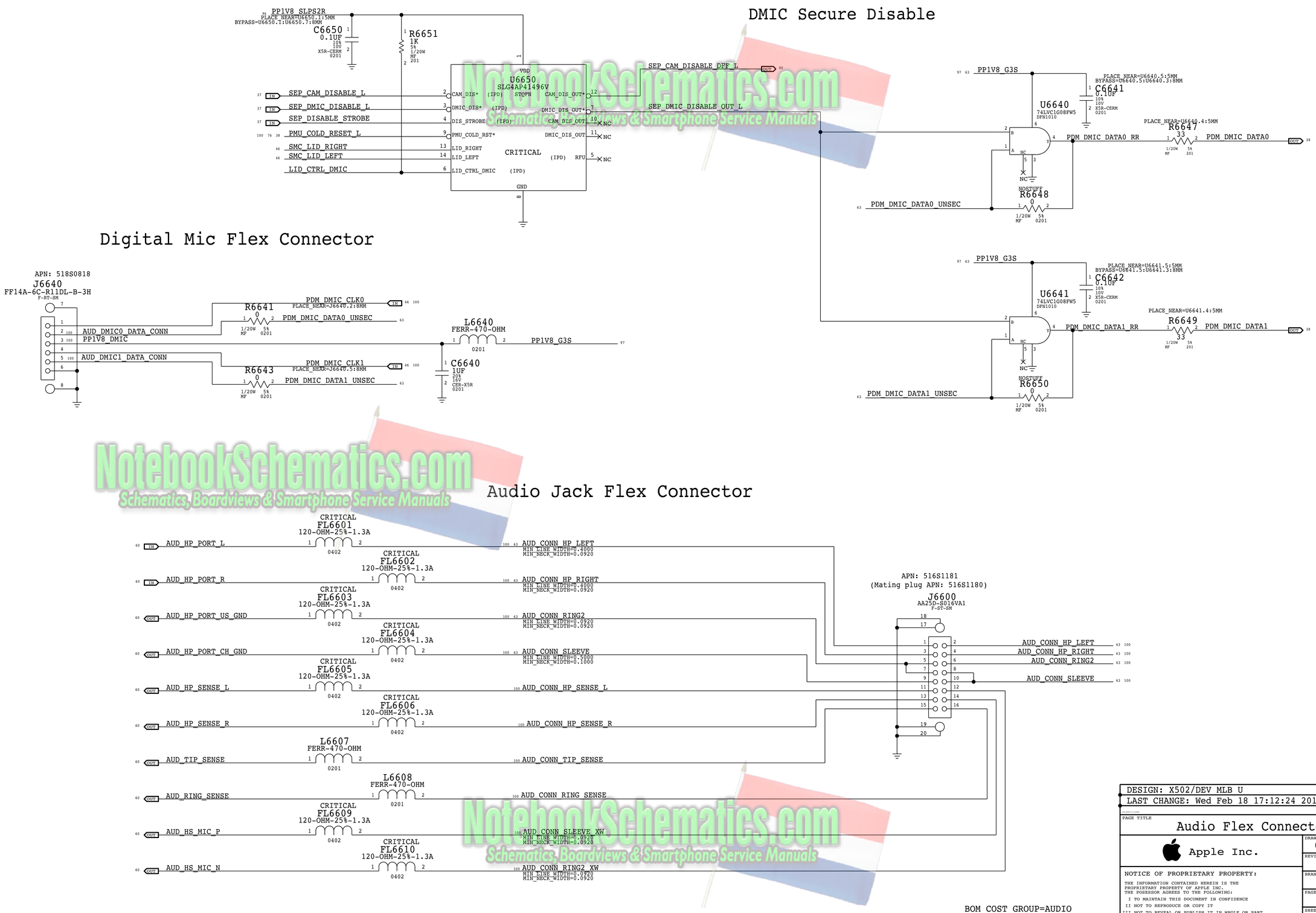

NotebookSchematics.com
Schematics, Boardviews & Smartphone Service Manuals

KBD CONNECTOR

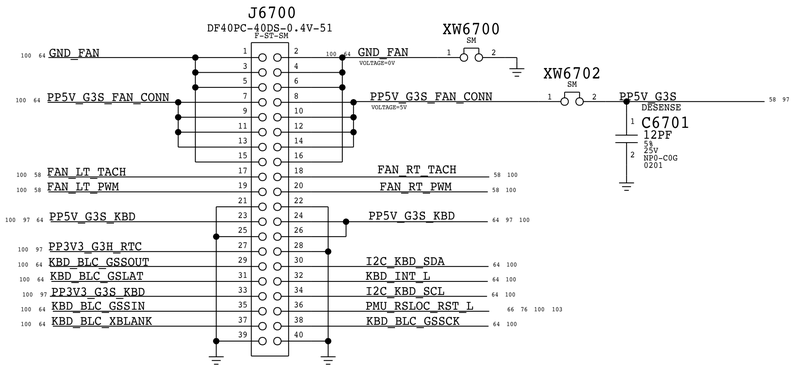

516S00177 (RCPT, 0.3A per pin)
MATE WITH PLUG 516S00054

TPAD CONNECTOR

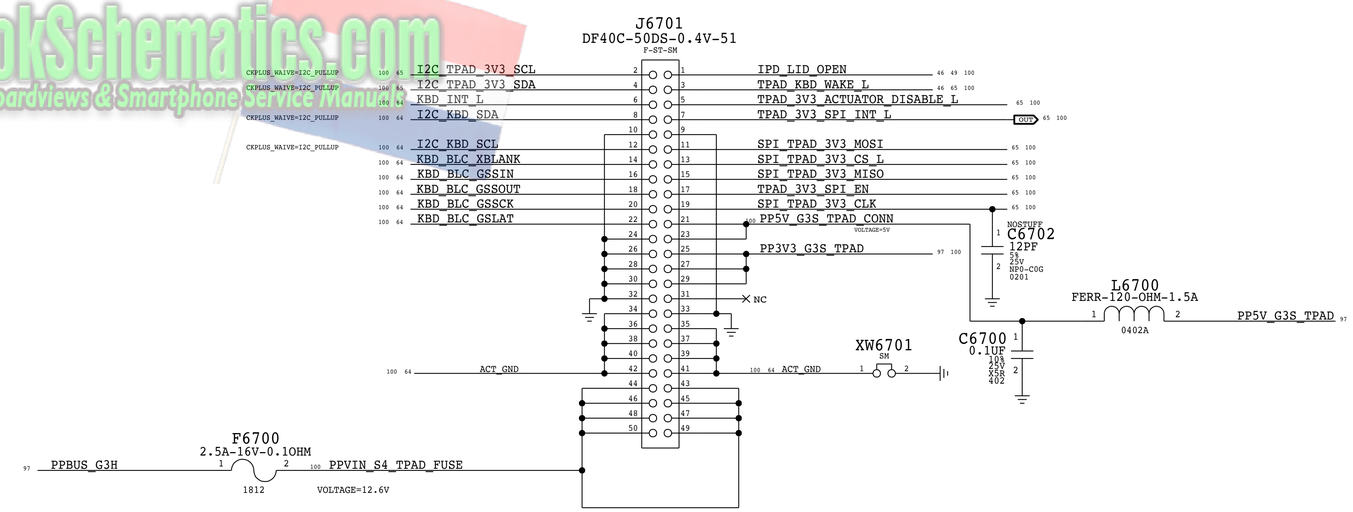

516S00187, MATE WITH 516S00188

NotebookSchematics.com
Schematics, Boardviews & Smartphone Service Manuals

BOM_COST_GROUP=KEYBOARD

SYNC_MATER=2132_GA888 SYNC_DATE=04/12/2017

PAGE TITLE
Keyboard & Trackpad 1

Apple Inc.

DRAWING NUMBER 051-02166
SIZE D
REVISION 4.0.0
BRANCH evt-mars-0
PAGE 67 OF 150
SHEET 64 OF 108

NOTICE OF PROPRIETARY PROPERTY:
THE INFORMATION CONTAINED HEREIN IS THE PROPRIETARY PROPERTY OF APPLE INC.
THE POSESSOR AGREES TO THE FOLLOWING:
I TO MAINTAIN THIS DOCUMENT IN CONFIDENCE
II NOT TO REPRODUCE OR COPY IT
III NOT TO REVEAL OR PUBLISH IT IN WHOLE OR PART
IV ALL RIGHTS RESERVED

Trackpad Level Shifting

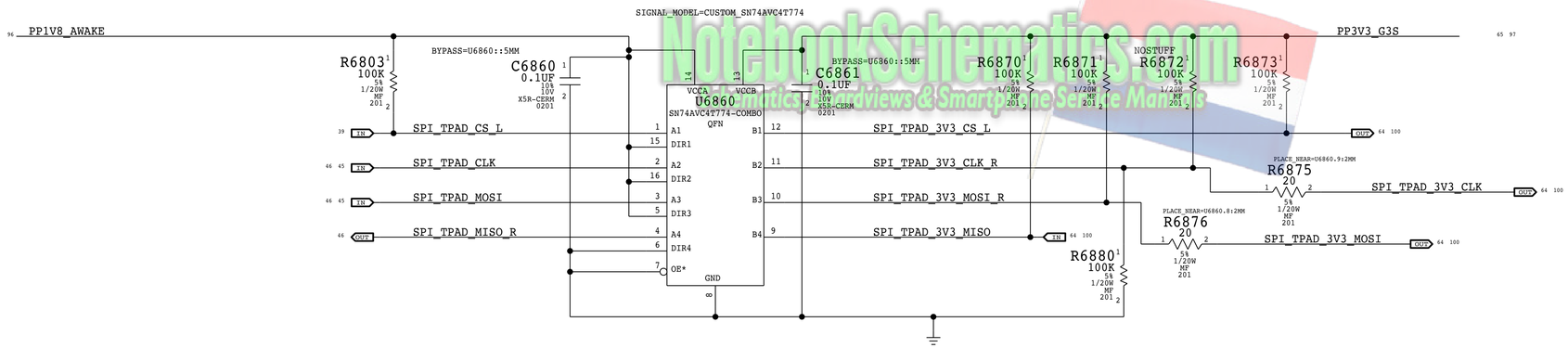

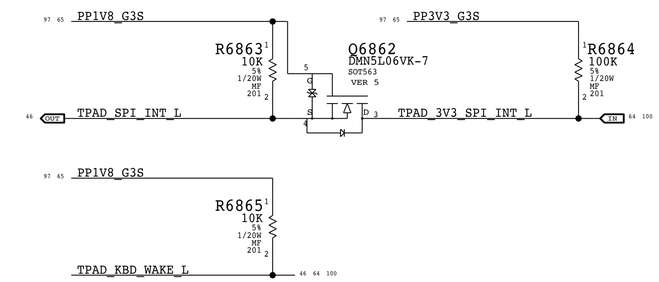

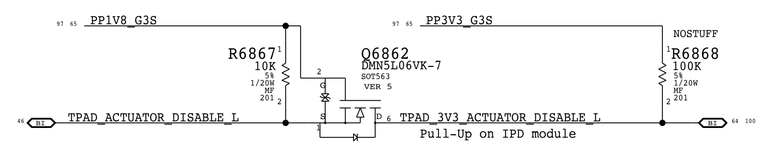

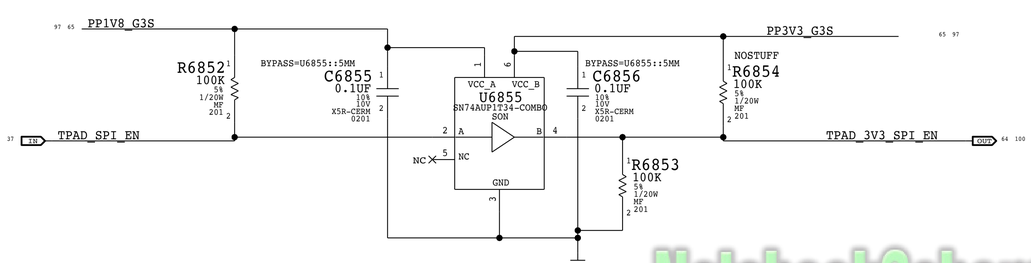

BOM_COST_GROUP=TRACKPAD

SYNC_MASTER=J132_JIN SYNC_DATE=09/05/2017

PAGE TITLE

Keyboard & Trackpad 2

Apple Inc.

DRAWING NUMBER 051-02166 SIZE D

REVISION 4.0.0

BRANCH evt-mars-0

PAGE 68 OF 150

SHEET 65 OF 108

NOTICE OF PROPRIETARY PROPERTY:
THE INFORMATION CONTAINED HEREIN IS THE PROPRIETARY PROPERTY OF APPLE INC.
THE POSESSOR AGREES TO THE FOLLOWING:
I TO MAINTAIN THIS DOCUMENT IN CONFIDENCE
II NOT TO REPRODUCE OR COPY IT
III NOT TO REVEAL OR PUBLISH IT IN WHOLE OR PART
IV ALL RIGHTS RESERVED

NotebookSchematics.com
Schematics, Boardviews & Smartphone Service Manuals

J79 Battery Hotbar Flex Pads

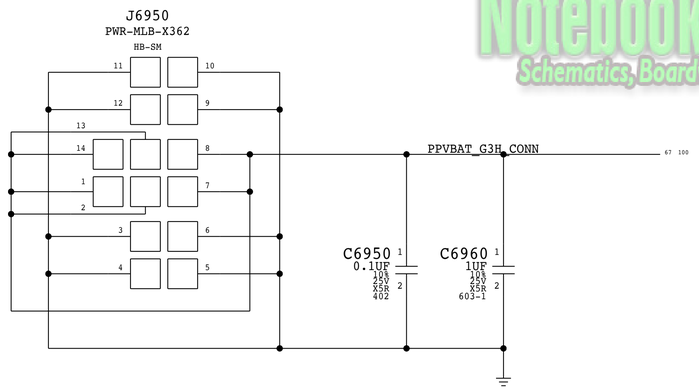

BMU POWER FLEX HOTBAR'd TO THE MLB:

PART NUMBER	QTY	DESCRIPTION	REFERENCE DES	CRITICAL	BOM OPTION
632-00566	1	PCBA,FLEX,BMU PWR,X362	J6950	CRITICAL	

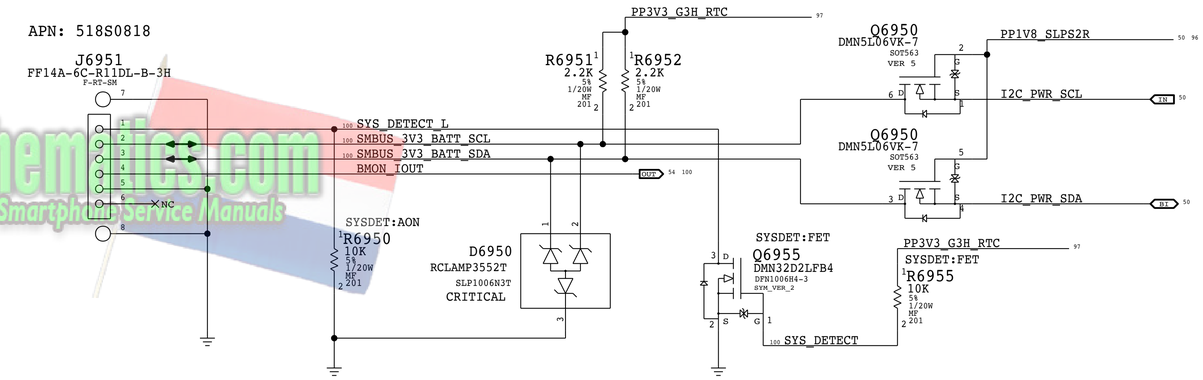

SMC Reset Circuit

Right Shift & Left Option Control
followed by ON OFF button press.

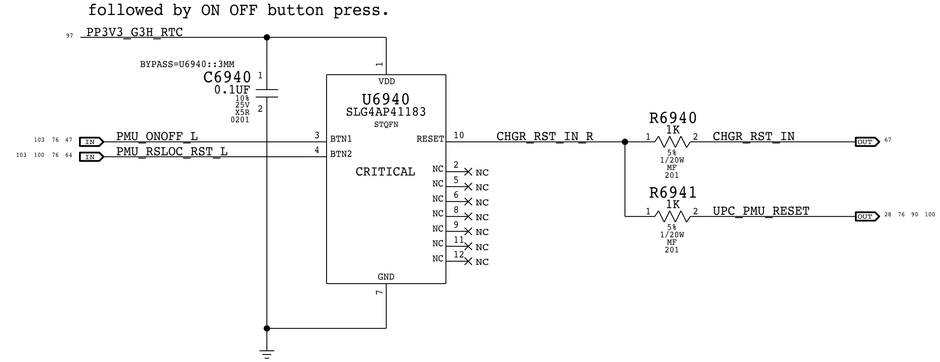

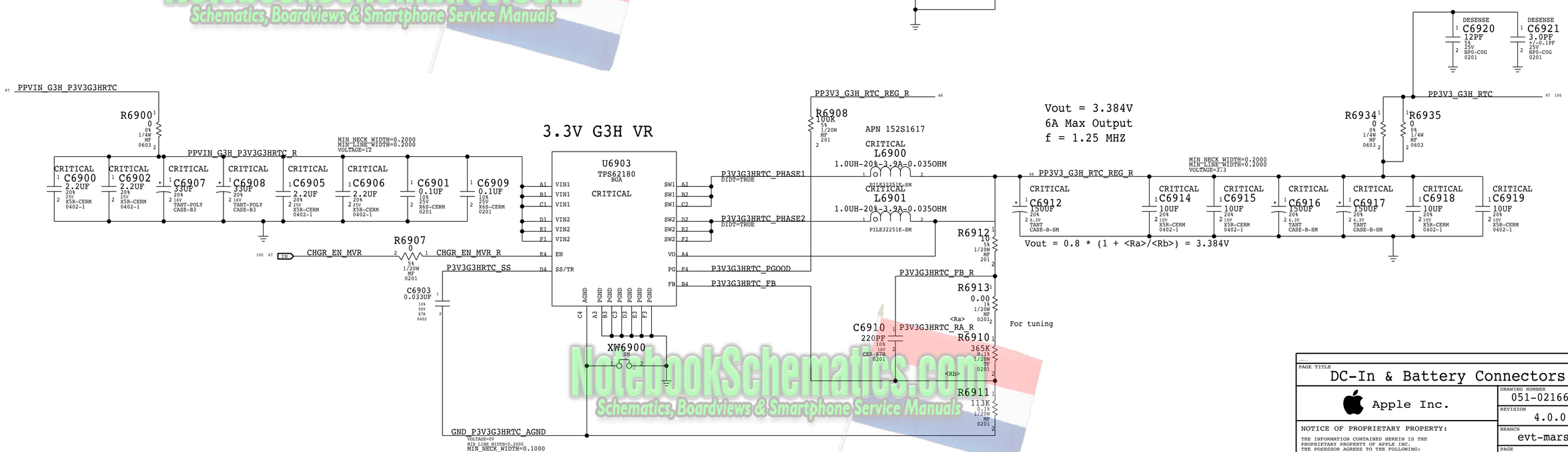

NotebookSchematics.com
Schematics, Boardviews & Smartphone Service Manuals

PAGE TITLE
DC-In & Battery Connectors

Apple Inc.

DRAWING NUMBER 051-02166 SIZE D
REVISION 4.0.0
BRANCH evt-mars-0
PAGE 69 OF 150
SHEET 66 OF 108

NOTICE OF PROPRIETARY PROPERTY:
THE INFORMATION CONTAINED HEREIN IS THE PROPRIETARY PROPERTY OF APPLE INC.
THE POSSESSOR AGREES TO THE FOLLOWING:
I TO MAINTAIN THIS DOCUMENT IN CONFIDENCE
II NOT TO REPRODUCE OR COPY IT
III NOT TO REVEAL OR PUBLISH IT IN WHOLE OR PART
IV ALL RIGHTS RESERVED

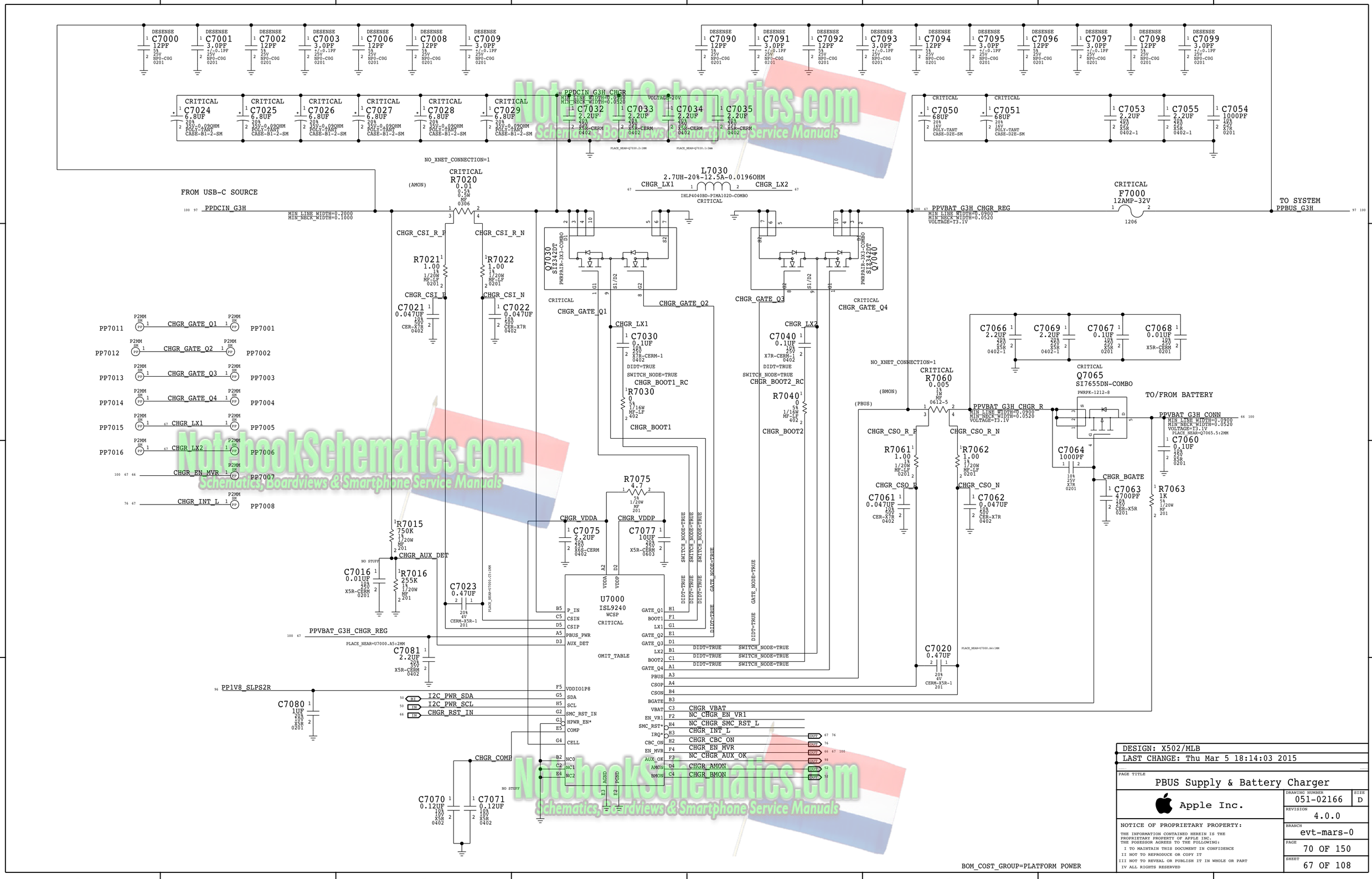
FROM USB-C SOURCE
PPDCIN_G3H
MIN_LINE_WIDTH=0.2000
MIN_NECK_WIDTH=0.1000
NO_XNET_CONNECTION=1
CRITICAL
R7020
0.01
0.5%
0.5W
MF
0306
(AMON)
CHGR_CSI_R_P
CHGR_CSI_R_N
R7021
1.00
1%
1/20W
MF-LF
0201
R7022
1.00
1%
1/20W
MF-LF
0201
CHGR_CSI_P
CHGR_CSI_N
C7021
0.047UF
10%
50V
CER-X7R
0402
C7022
0.047UF
10%
50V
CER-X7R
0402
L7030
2.7UH-20%-12.5A-0.0196OHM
CHGR_LX1
CHGR_LX2
IHLP4040BD-PIMA102D-COMBO
CRITICAL
Q7030
SI7342DT
PWRPAIR-2X3-COMBO
Q7040
CHGR_GATE_Q1
CHGR_GATE_Q2
CHGR_GATE_Q3
CHGR_GATE_Q4
C7030
0.1UF
10%
25V
X7R-CERM-1
0402
DIDT=TRUE
SWITCH_NODE=TRUE
CHGR_BOOT1_RC
R7030
0
5%
1/16W
MF-LF
402
CHGR_BOOT1
C7040
0.1UF
10%
25V
X7R-CERM-1
0402
CHGR_BOOT2_RC
R7040
0
5%
1/16W
MF-LF
402
CHGR_BOOT2
PPVBAT_G3H_CHGR_REG
MIN_LINE_WIDTH=0.0900
MIN_NECK_WIDTH=0.0520
VOLTAGE=13.1V
F7000
12AMP-32V
1206
TO SYSTEM
PPBUS_G3H
C7066
2.2UF
20%
25V
X5R
0402-1
C7069
2.2UF
20%
25V
X5R
0402-1
C7067
0.1UF
10%
25V
X5R
0201
C7068
0.01UF
10%
25V
X5R-CERM
0201
Q7065
SI7655DN-COMBO
PWRPK-1212-8
TO/FROM BATTERY
PPVBAT_G3H_CHGR_R
PPVBAT_G3H_CONN
MIN_LINE_WIDTH=0.0900
MIN_NECK_WIDTH=0.0520
VOLTAGE=13.1V
PLACE_NEAR=Q7065.5:2MM
C7060
0.1UF
10%
25V
X5R
0201
R7060
0.005
1%
1W
MF
0612-5
(BMON)
(PBUS)
CHGR_CSO_R_P
CHGR_CSO_R_N
R7061
1.00
1%
1/20W
MF-LF
0201
R7062
1.00
1%
1/20W
MF-LF
0201
C7064
1000PF
10%
25V
X7R
0201
CHGR_BGATE
C7063
4700PF
10%
25V
CER-X5R
0201
R7063
1K
5%
1/20W
MF
201
CHGR_CSO_P
CHGR_CSO_N
C7061
0.047UF
10%
50V
CER-X7R
0402
C7062
0.047UF
10%
50V
CER-X7R
0402
C7020
0.47UF
20%
4V
CERM-X5R-1
201
PP7011 CHGR_GATE_Q1 PP7001
PP7012 CHGR_GATE_Q2 PP7002
PP7013 CHGR_GATE_Q3 PP7003
PP7014 CHGR_GATE_Q4 PP7004
PP7015 CHGR_LX1 PP7005
PP7016 CHGR_LX2 PP7006
CHGR_EN_MVR PP7007
CHGR_INT_L PP7008
R7075
4.7
5%
1/20W
MF
201
CHGR_VDDA
CHGR_VDDP
C7075
2.2UF
20%
25V
X5R-CERM
0402
C7077
10UF
20%
25V
X5R-CERM
0603
R7015
750K
1%
1/20W
MF
201
CHGR_AUX_DET
C7016
0.01UF
10%
25V
X5R-CERM
0201
R7016
255K
1%
1/20W
MF
201
C7023
0.47UF
20%
4V
CERM-X5R-1
201
U7000
ISL9240
WCSP
CRITICAL
OMIT_TABLE
PPVBAT_G3H_CHGR_REG
PLACE_NEAR=U7000.A5:2MM
C7081
2.2UF
20%
25V
X5R-CERM
0402
PP1V8_SLPS2R
C7080
1UF
20%
10V
X5R
0201
I2C_PWR_SDA
I2C_PWR_SCL
CHGR_RST_IN
CHGR_COMP
C7070
0.12UF
10%
10V
X5R
0402
C7071
0.12UF
10%
10V
X5R
0402
P_IN
CSIN
CSIP
PBUS_PWR
AUX_DET
VDDIO1P8
SDA
SCL
SMC_RST_IN
HPWR_EN*
COMP
CELL
NC0
NC1
NC2
GATE_Q1
BOOT1
LX1
GATE_Q2
GATE_Q3
LX2
BOOT2
GATE_Q4
PBUS
CSOP
CSON
BGATE
VBAT
EN_VR1
SMC_RST*
IRQ*
CBC_ON
EN_MVR
AUX_OK
AMON
BMON
CHGR_VBAT
NC_CHGR_EN_VR1
NC_CHGR_SMC_RST_L
CHGR_INT_L
CHGR_CBC_ON
CHGR_EN_MVR
NC_CHGR_AUX_OK
CHGR_AMON
CHGR_BMON
BOM_COST_GROUP=PLATFORM POWER
DESIGN: X502/MLB
LAST CHANGE: Thu Mar 5 18:14:03 2015
PAGE TITLE
PBUS Supply & Battery Charger
Apple Inc.
DRAWING NUMBER 051-02166
SIZE D
REVISION 4.0.0
BRANCH evt-mars-0
PAGE 70 OF 150
SHEET 67 OF 108
NOTICE OF PROPRIETARY PROPERTY:
THE INFORMATION CONTAINED HEREIN IS THE PROPRIETARY PROPERTY OF APPLE INC.
THE POSESSOR AGREES TO THE FOLLOWING:
I TO MAINTAIN THIS DOCUMENT IN CONFIDENCE
II NOT TO REPRODUCE OR COPY IT
III NOT TO REVEAL OR PUBLISH IT IN WHOLE OR PART
IV ALL RIGHTS RESERVED

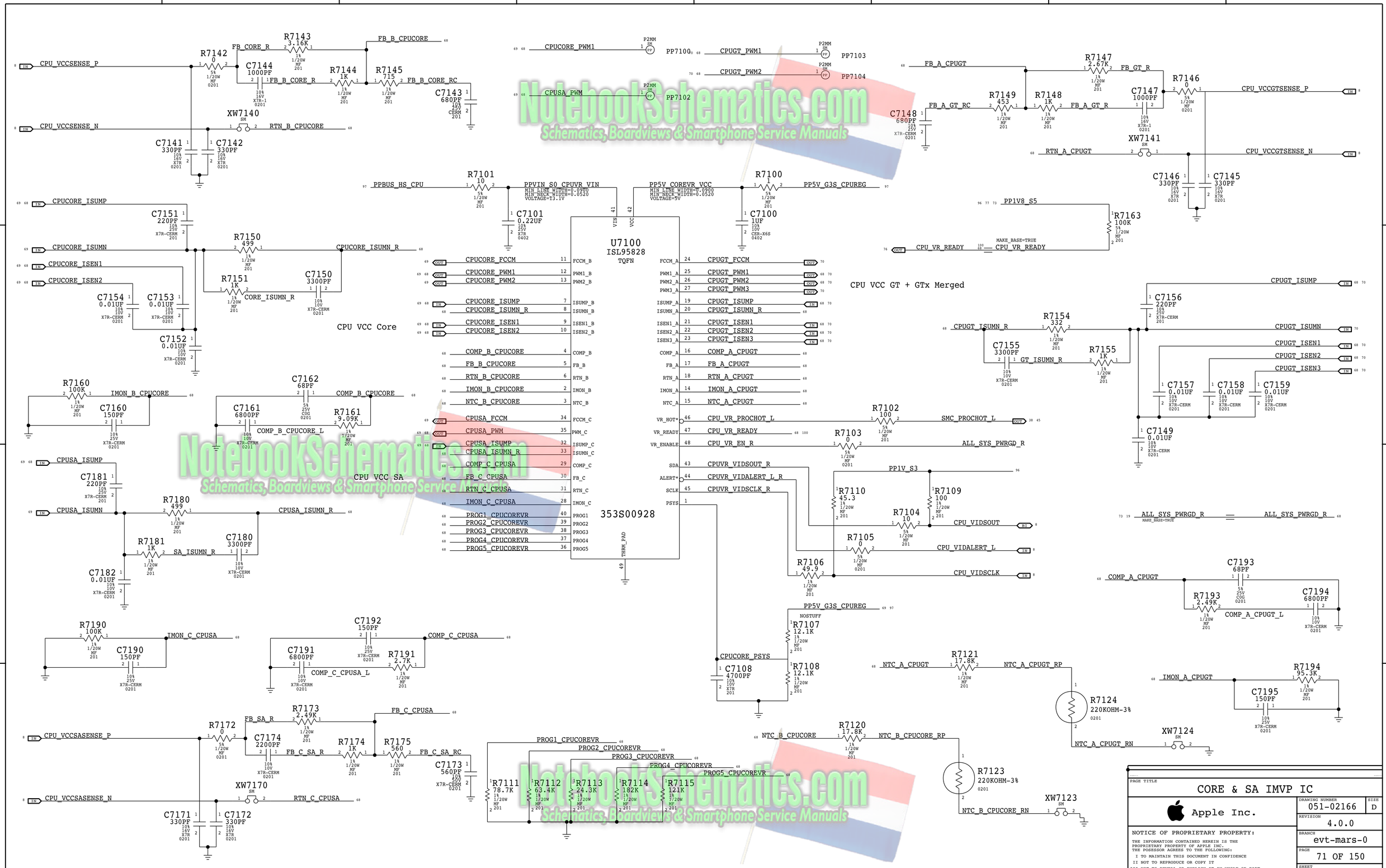

NotebookSchematics.com
Schematics, Boardviews & Smartphone Service Manuals

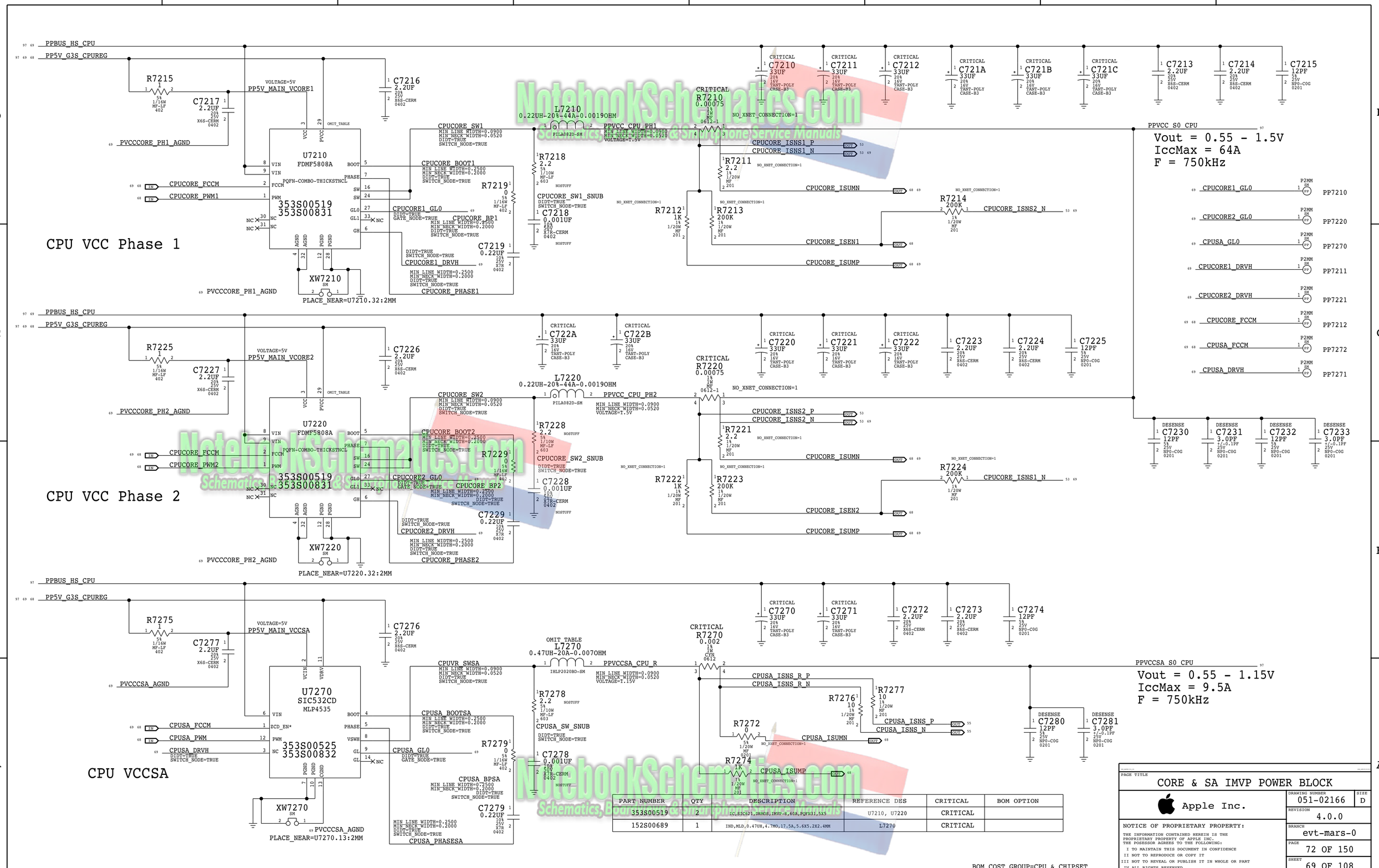

PART NUMBER	QTY	DESCRIPTION	REFERENCE DES	CRITICAL	BOM OPTION
353S00519	2	IC,SIC621,DRMOS,IMVF-8,60A,PQFN31,5X5	U7210, U7220	CRITICAL	
152S00689	1	IND,MLD,0.47UH,4.7MO,17.5A,5.6X5.2X2.4MM	L7270	CRITICAL	

NotebookSchematics.com
Schematics, Boardview & Smartphone Service Manuals

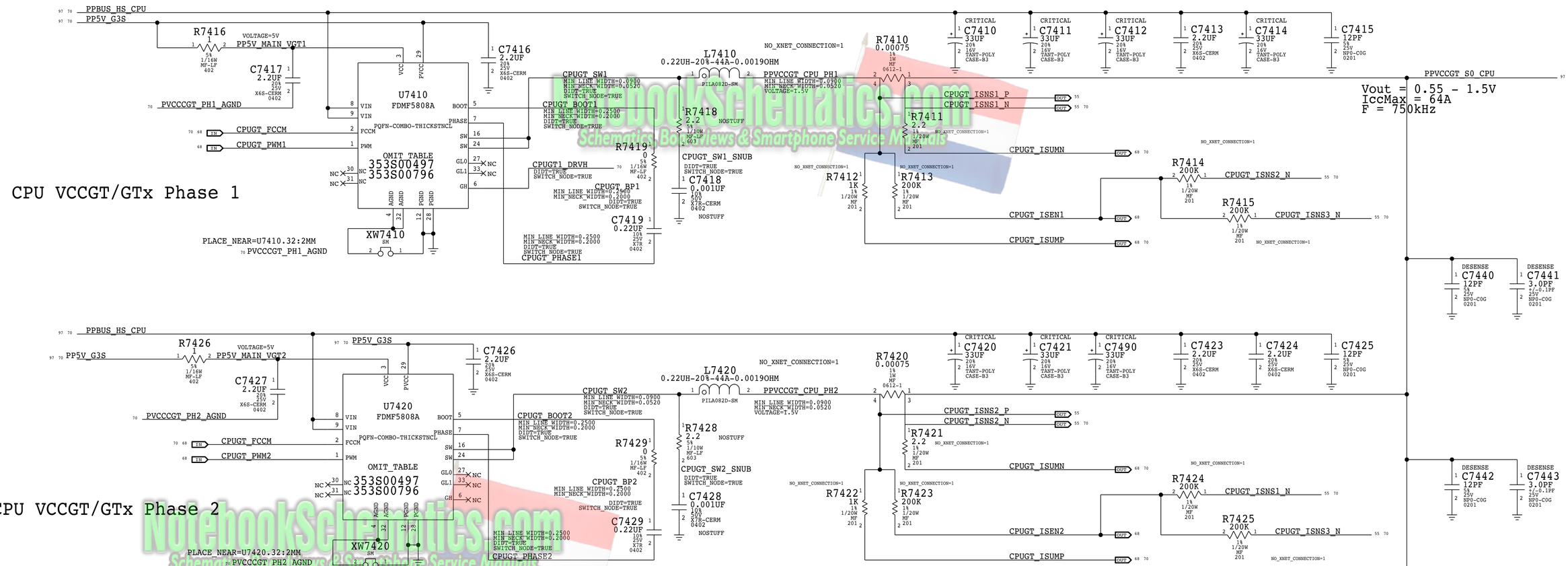

PART NUMBER	QTY	DESCRIPTION	REFERENCE DES	CRITICAL	BOM OPTION
353S00497	3	IC,FDMF808A,DRMOS,IMVP8,50A,PQFN31,5X5	U7410, U7420, U7430	CRITICAL	

BOM_COST_GROUP=CPU & CHIPSET

PAGE TITLE
GT & GTX IMVP POWER BLOCK

Apple Inc.

DRAWING NUMBER	051-02166
SIZE	D
REVISION	4.0.0
BRANCH	evt-mars-0
PAGE	74 OF 150
SHEET	70 OF 108

NOTICE OF PROPRIETARY PROPERTY:
THE INFORMATION CONTAINED HEREIN IS THE PROPRIETARY PROPERTY OF APPLE INC.
THE POSESSOR AGREES TO THE FOLLOWING:
I TO MAINTAIN THIS DOCUMENT IN CONFIDENCE
II NOT TO REPRODUCE OR COPY IT
III NOT TO REVEAL OR PUBLISH IT IN WHOLE OR PART
IV ALL RIGHTS RESERVED

NotebookSchematics.com
Schematics, Boardviews & Smartphone Service Manuals

NotebookSchematics.com
Schematics, Boardviews & Smartphone Service Manuals

SYNC_MASTER=J132_MAO SYNC_DATE=02/09/2017

PAGE TITLE

Empty

Apple Inc.

DRAWING NUMBER 051-02166 SIZE D

REVISION 4.0.0

BRANCH evt-mars-0

PAGE 75 OF 150

SHEET 71 OF 108

NOTICE OF PROPRIETARY PROPERTY:

THE INFORMATION CONTAINED HEREIN IS THE PROPRIETARY PROPERTY OF APPLE INC.
THE POSESSOR AGREES TO THE FOLLOWING:
I TO MAINTAIN THIS DOCUMENT IN CONFIDENCE
II NOT TO REPRODUCE OR COPY IT
III NOT TO REVEAL OR PUBLISH IT IN WHOLE OR PART
IV ALL RIGHTS RESERVED

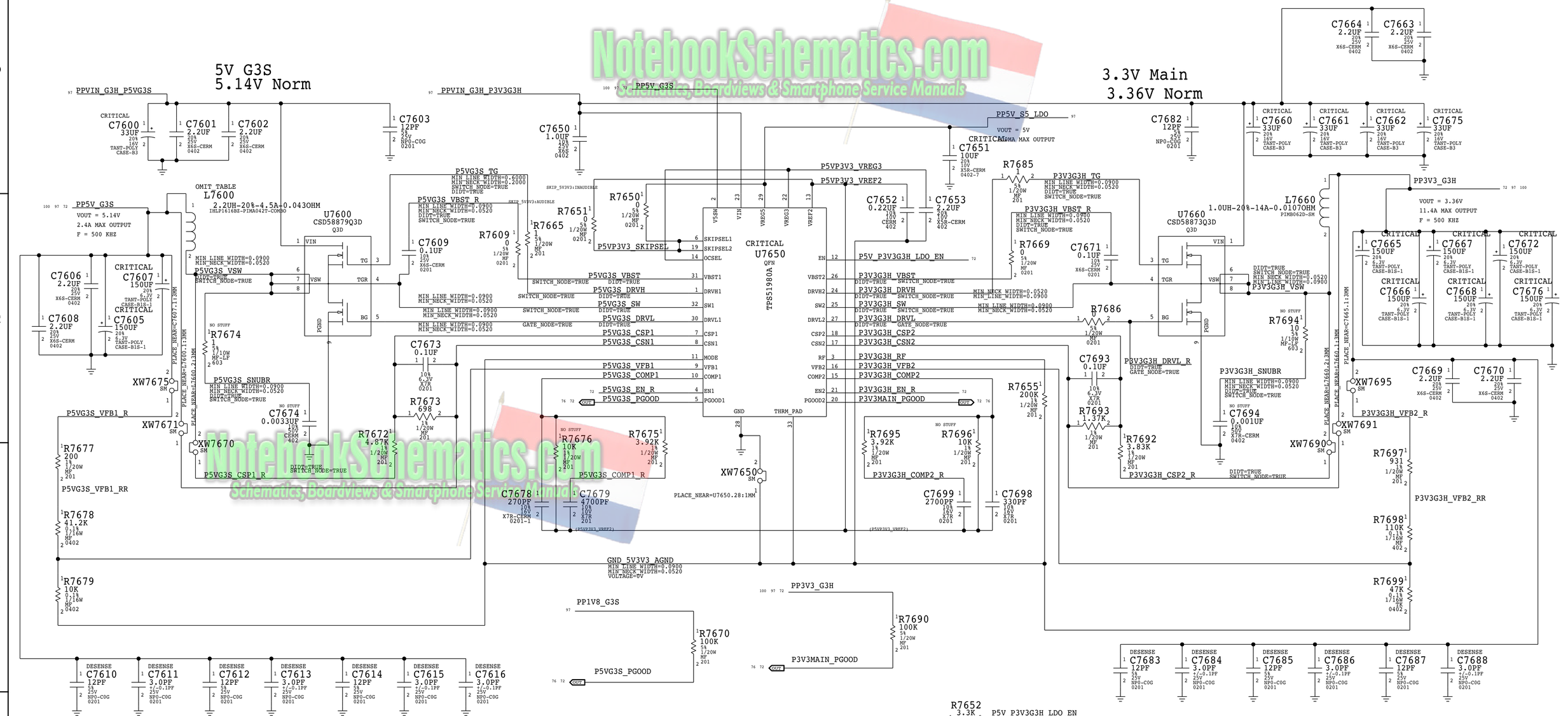

PART NUMBER	QTY	DESCRIPTION	REFERENCE DES	CRITICAL	BOM OPTION
152S00182	1	IND,PWR,2.2UH,20%,4.5A,43MOHM,4X4MM	L7600	CRITICAL	

PAGE TITLE
Power - 5V 3.3V Supply

Apple Inc.

DRAWING NUMBER 051-02166
SIZE D
REVISION 4.0.0
BRANCH evt-mars-0
PAGE 76 OF 150
SHEET 72 OF 108

NOTICE OF PROPRIETARY PROPERTY:
THE INFORMATION CONTAINED HEREIN IS THE PROPRIETARY PROPERTY OF APPLE INC.
THE POSESSOR AGREES TO THE FOLLOWING:
I TO MAINTAIN THIS DOCUMENT IN CONFIDENCE
II NOT TO REPRODUCE OR COPY IT
III NOT TO REVEAL OR PUBLISH IT IN WHOLE OR PART
IV ALL RIGHTS RESERVED

NotebookSchematics.com
Schematics, Boardviews & Smartphone Service Manuals

1V EDRAM & EOPIO

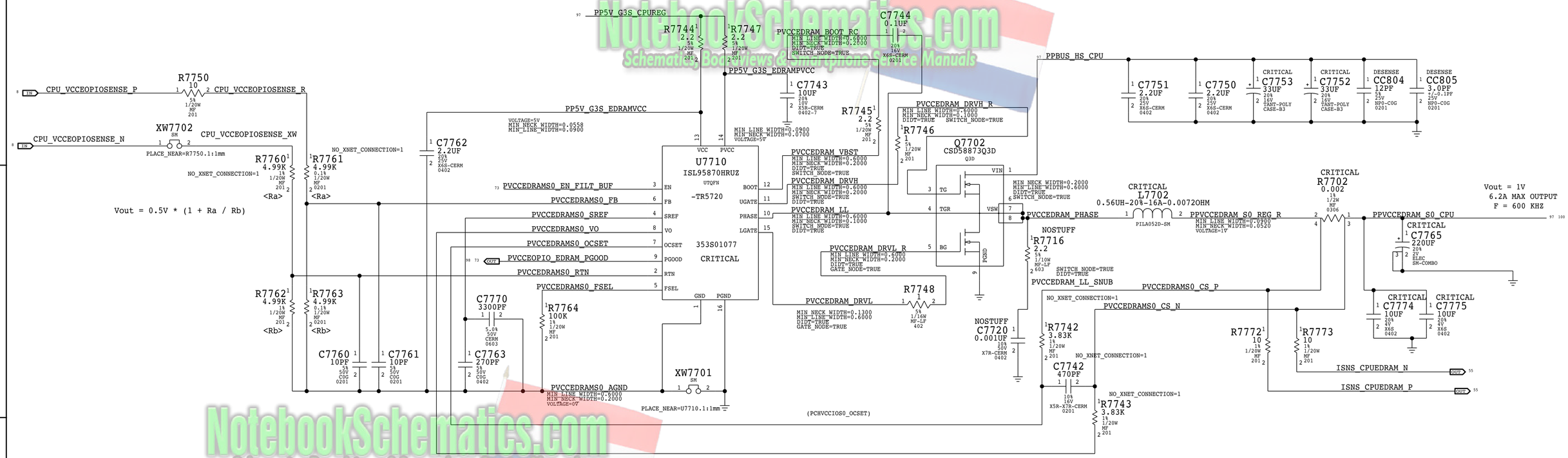

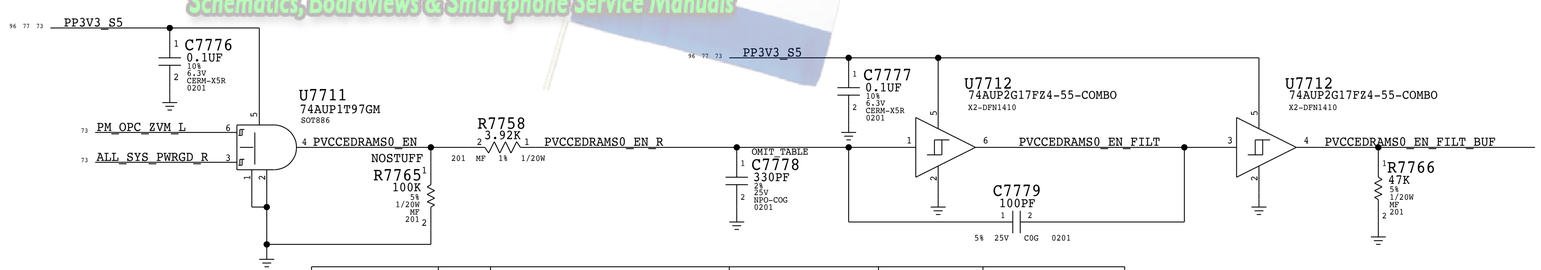

EDRAM EN BYPASS

PART NUMBER	QTY	DESCRIPTION	REFERENCE DES	CRITICAL	BOM OPTION
131S00294	1	CAP,C0G,330PF,5%,25V,0201	C7778		

LEVEL SHIFT

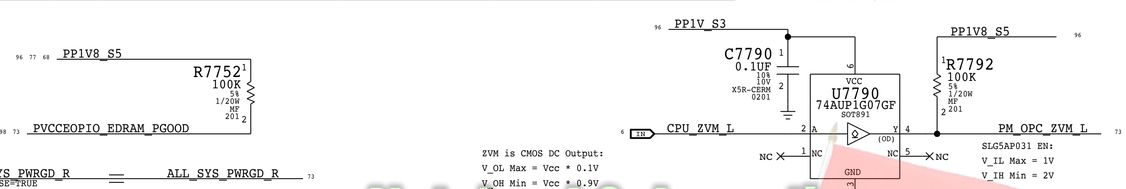

BOM_COST_GROUP=CPU & CHIPSET

PAGE TITLE	Power - EOPIO EDRAM Supply
	Apple Inc.
DRAWING NUMBER	051-02166
SIZE	D
REVISION	4.0.0
BRANCH	evt-mars-0
PAGE	77 OF 150
SHEET	73 OF 108

NOTICE OF PROPRIETARY PROPERTY:
THE INFORMATION CONTAINED HEREIN IS THE PROPRIETARY PROPERTY OF APPLE INC.
THE POSESSOR AGREES TO THE FOLLOWING:
I TO MAINTAIN THIS DOCUMENT IN CONFIDENCE
II NOT TO REPRODUCE OR COPY IT
III NOT TO REVEAL OR PUBLISH IT IN WHOLE OR PART
IV ALL RIGHTS RESERVED

NotebookSchematics.com
Schematics, Boardviews & Smartphone Service Manuals

Note : Design based on Calpe ERS - D2449-A0-110-00_0v3.pdf (Radar# 24696002)
System Block Diagram - T290 Power System Architecture . v9
Optimize componentS for individual projects based on EDP(A)

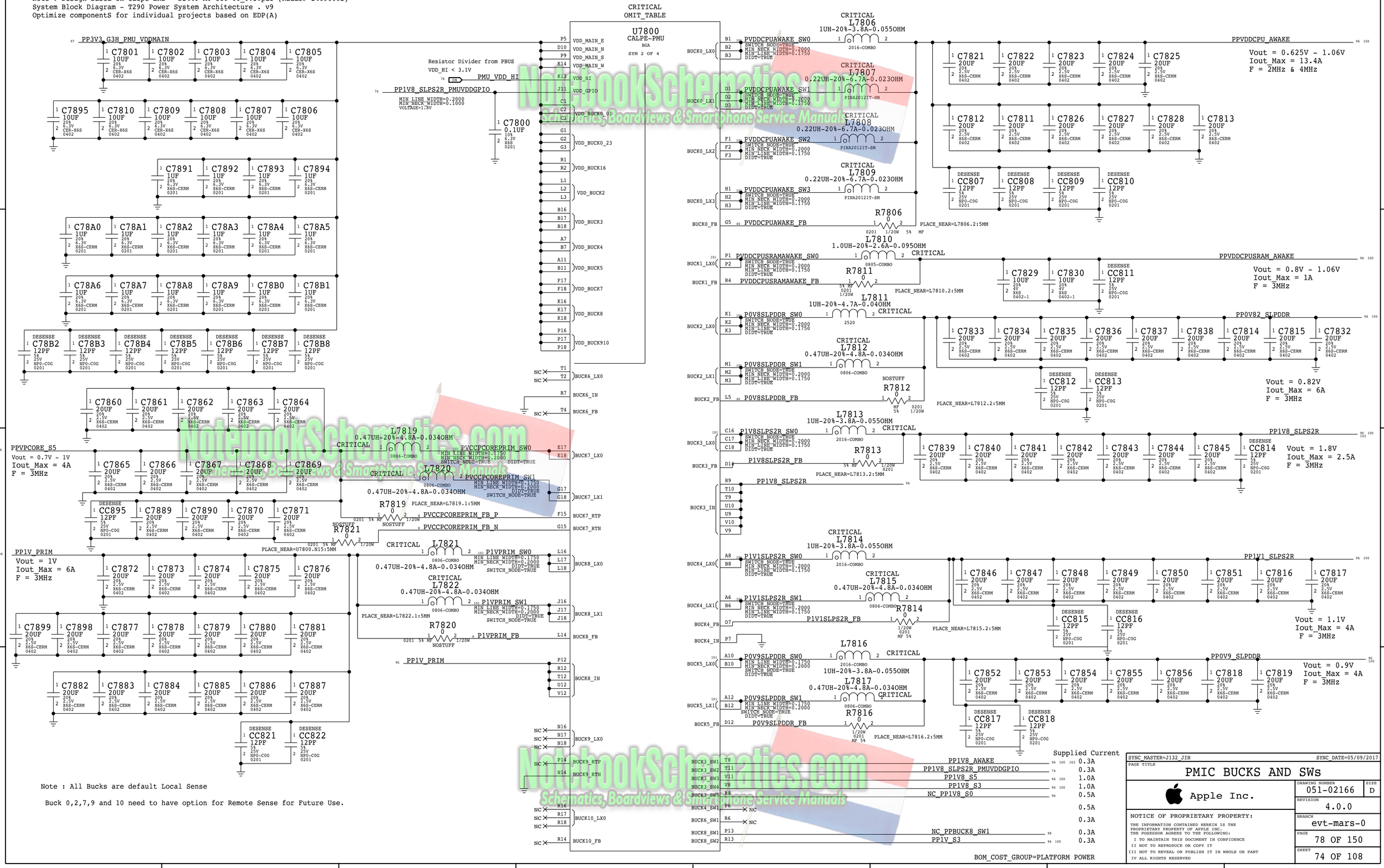

NotebookSchematics.com
Schematics, Boardviews & Smartphone Service Manuals

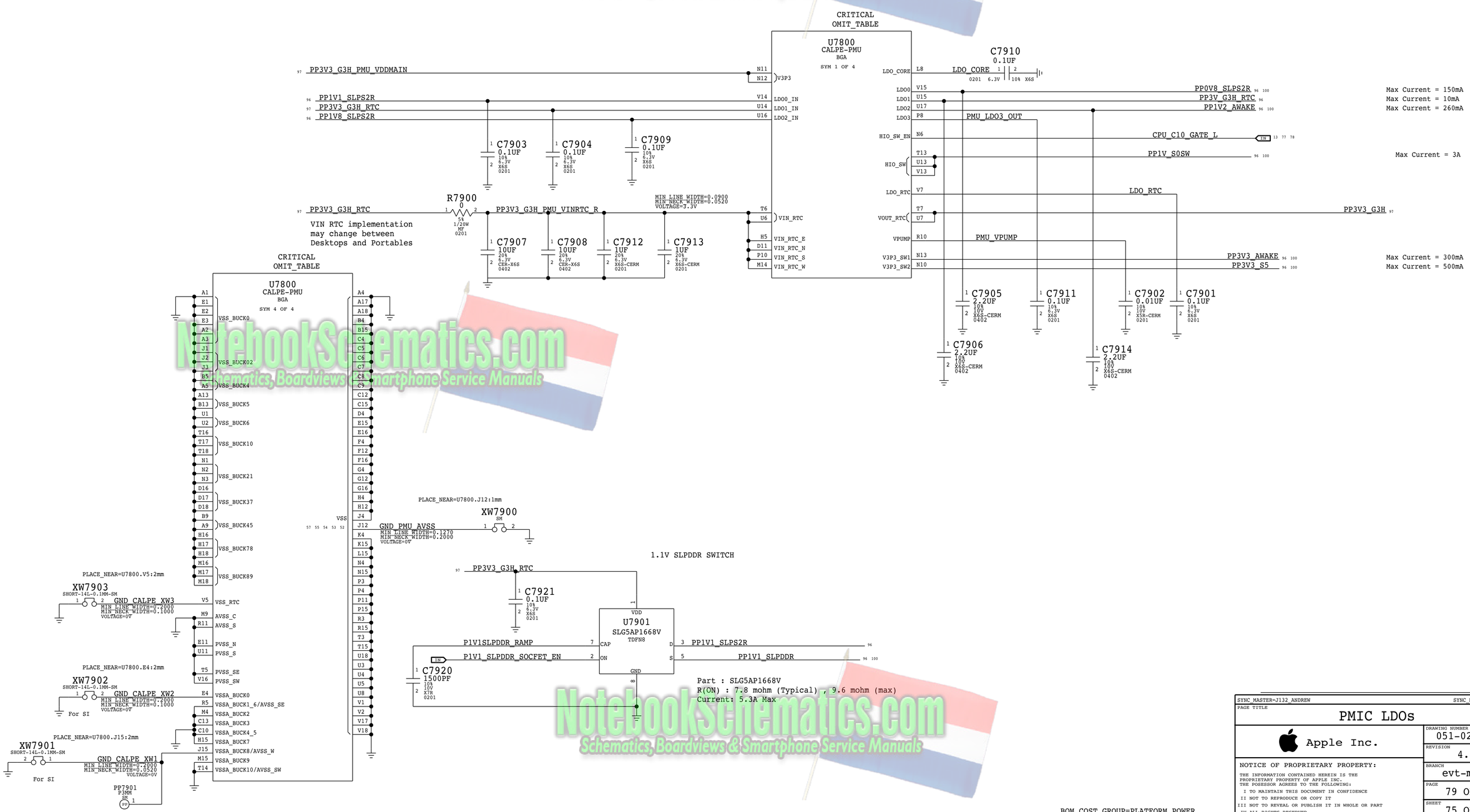

SYNC_MASTER=J132_ANDREW SYNC_DATE=06/21/2017

PAGE TITLE

PMIC LDOs

Apple Inc.

DRAWING NUMBER 051-02166 SIZE D

REVISION 4.0.0

BRANCH evt-mars-0

PAGE 79 OF 150

SHEET 75 OF 108

NOTICE OF PROPRIETARY PROPERTY:
THE INFORMATION CONTAINED HEREIN IS THE PROPRIETARY PROPERTY OF APPLE INC.
THE POSESSOR AGREES TO THE FOLLOWING:
I TO MAINTAIN THIS DOCUMENT IN CONFIDENCE
II NOT TO REPRODUCE OR COPY IT
III NOT TO REVEAL OR PUBLISH IT IN WHOLE OR PART
IV ALL RIGHTS RESERVED

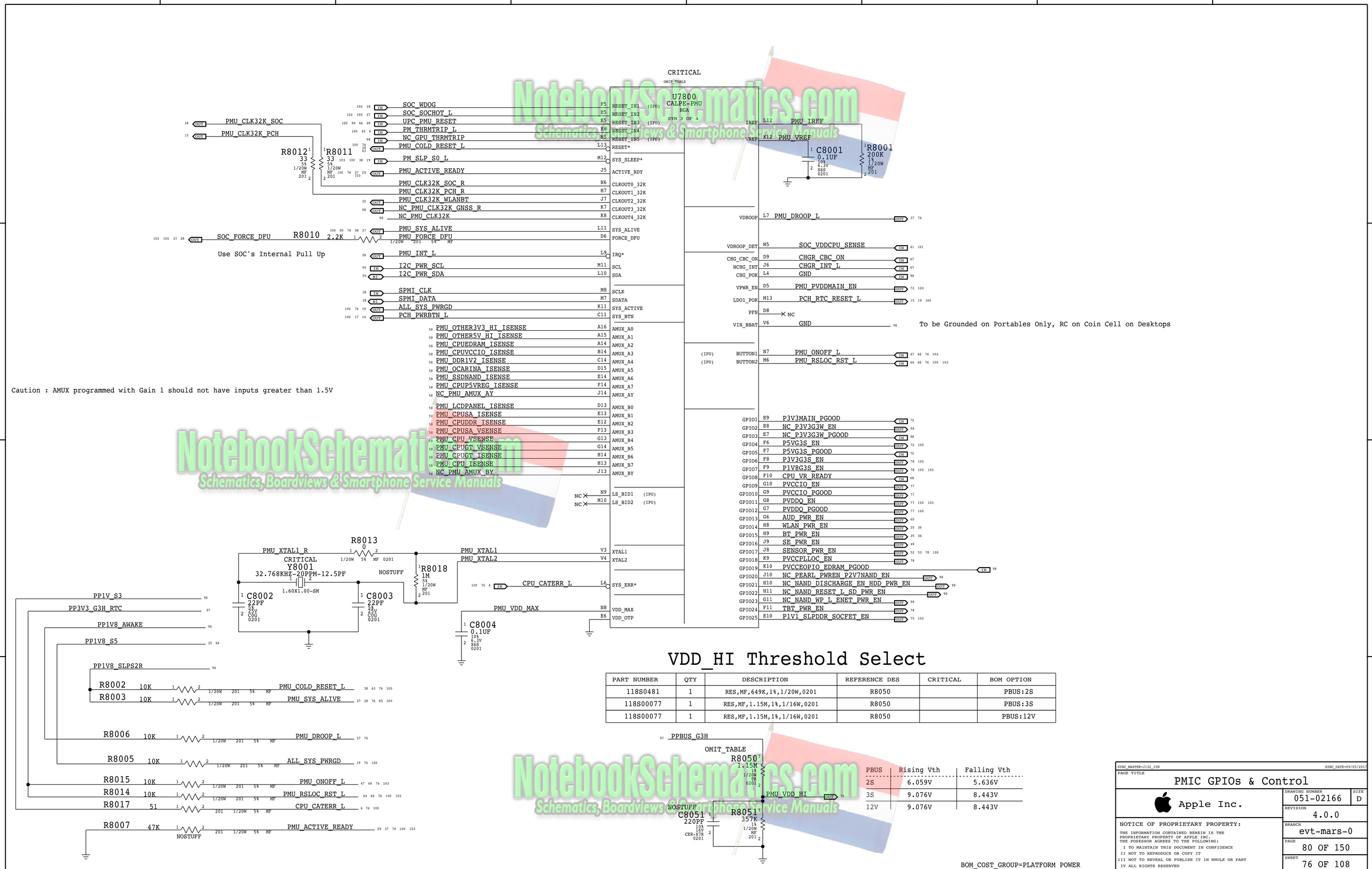

VDD_HI Threshold Select

PART NUMBER	QTY	DESCRIPTION	REFERENCE DES	CRITICAL	BOM OPTION
118S0481	1	RES,MF,649K,1%,1/20W,0201	R8050		PBUS:2S
118S00077	1	RES,MF,1.15M,1%,1/16W,0201	R8050		PBUS:3S
118S00077	1	RES,MF,1.15M,1%,1/16W,0201	R8050		PBUS:12V

PBUS	Rising Vth	Falling Vth
2S	6.059V	5.636V
3S	9.076V	8.443V
12V	9.076V	8.443V

NotebookSchematics.com
Schematics, Boardviews & Smartphone Service Manuals

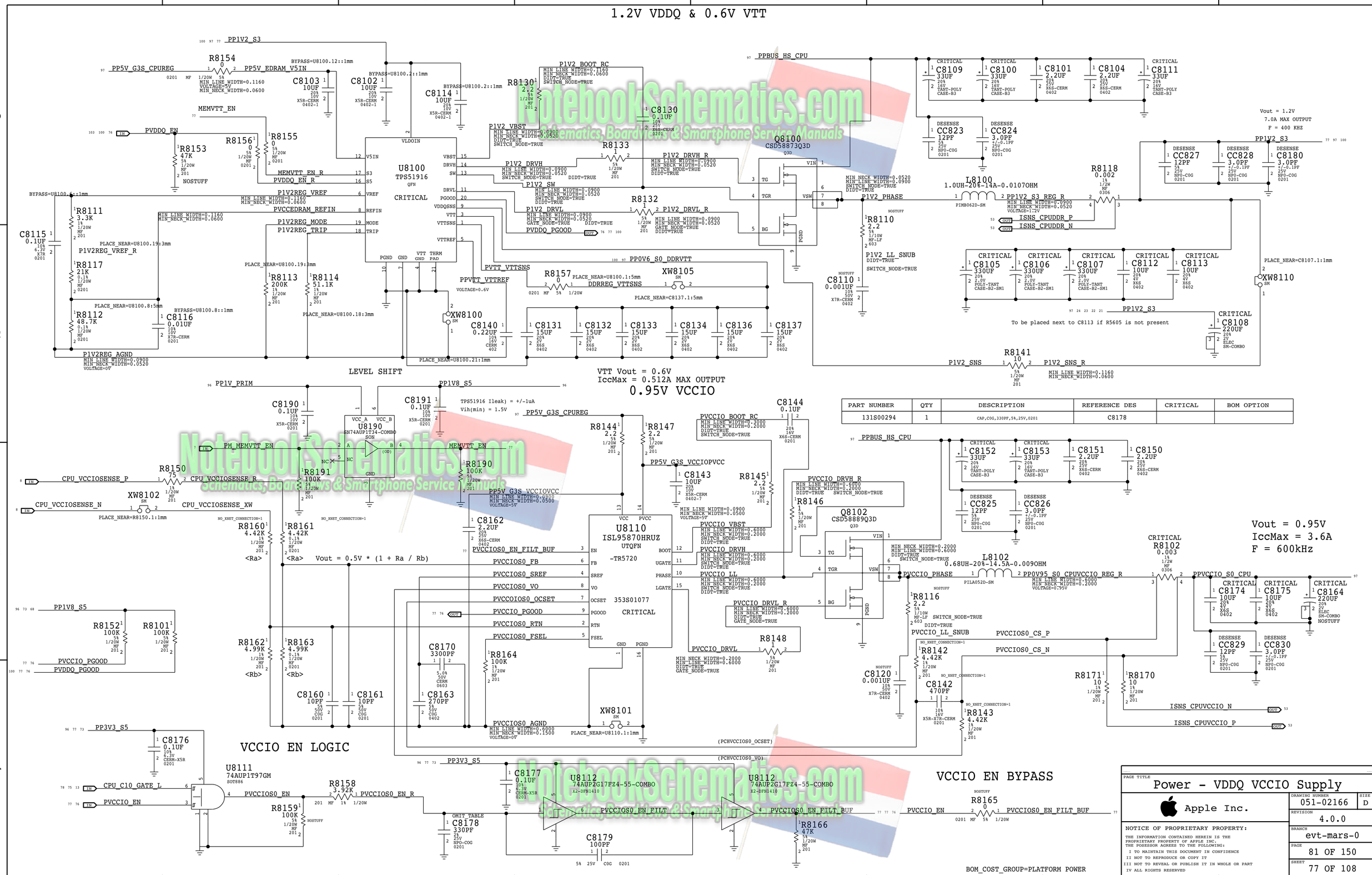

PART NUMBER	QTY	DESCRIPTION	REFERENCE DES	CRITICAL	BOM OPTION
131S00294	1	CAP,C0G,330PF,5%,25V,0201	C8178		

PAGE TITLE
Power - VDDQ VCCIO Supply

Apple Inc.

DRAWING NUMBER 051-02166 SIZE D
REVISION 4.0.0
BRANCH evt-mars-0
PAGE 81 OF 150
SHEET 77 OF 108

NOTICE OF PROPRIETARY PROPERTY:
THE INFORMATION CONTAINED HEREIN IS THE PROPRIETARY PROPERTY OF APPLE INC.
THE POSESSOR AGREES TO THE FOLLOWING:
I TO MAINTAIN THIS DOCUMENT IN CONFIDENCE
II NOT TO REPRODUCE OR COPY IT
III NOT TO REVEAL OR PUBLISH IT IN WHOLE OR PART
IV ALL RIGHTS RESERVED

Note: Load switches may be larger than necessary

3.3V G3 Standby Switch

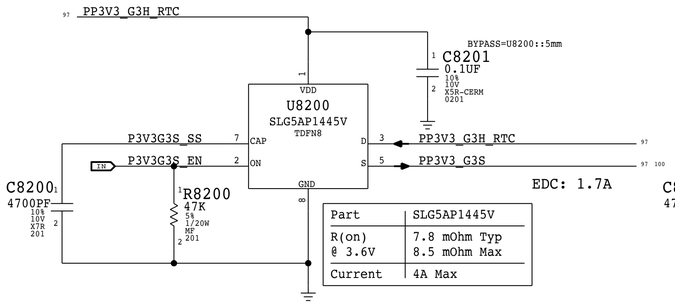

Part	SLG5AP1445V
R(on) @ 3.6V	7.8 mOhm Typ 8.5 mOhm Max
Current	4A Max

1.8V G3 Standby Switch

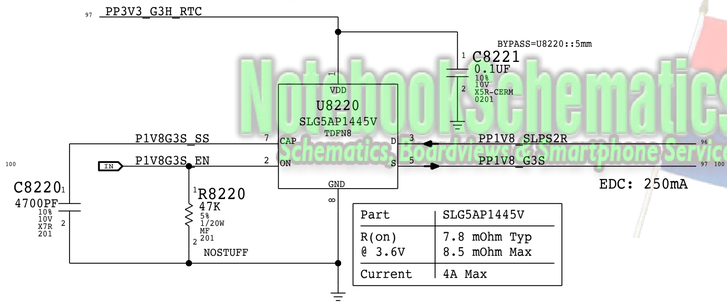

Part	SLG5AP1445V
R(on) @ 3.6V	7.8 mOhm Typ 8.5 mOhm Max
Current	4A Max

System Power States

System State:	Shutdown (G3H)		Standby (G3S)		Standby (S4)		Sleep (S0i/S3)		Run (S0)
CPU/PCH State:	Off (RTC Only)		Off (RTC Only)		Standby		Sleep		Run
SoC State:	S2R	Awake	S2R	Awake	S2R	Awake	S2R	Awake	Awake
Rails									
PP* S2R (0.8,1.1,1.8V)	On	On	On	On	On	On	On	On	On
PP* DDR (0.8,0.9,1.1V)	Off	On	Off	On	Off	On	Off	On	On
PP* AWAKE (CPU,SRAM,1.2,1.8,3.3V)	Off	On	Off	On	Off	On	Off	On	On
PP3V3_G3H (VR1)	On	On	On	On	On	On	On	On	On
PP* G3S (1.8,3.3,5V)	Off	On	On	On	On	On	On	On	On
PP* S5 (1.8,3.3V)	Off	Off	Off	Off	On	On	On	On	On
CPU/PCH VRs	Off	Off	Off	Off	Off/On	Off/On	Off/On	Off/On	On

* System: Shutdown Awake is a transition state only.
* SoC: SLP_DDR is a transition state only.
* CPU/PCH: S4 is only used by desktops for USB wakes.
* CPU/PCH: S5 is a transition state. May also be used for RTC wakes.

1.2V S0SW VCCPLL_OC Switch

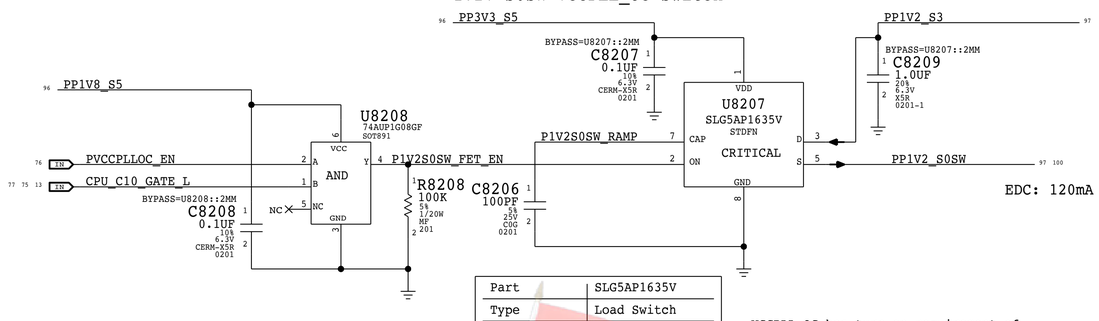

Part	SLG5AP1635V
Type	Load Switch
R(on) @ 3.3V	27.5 mOhm Typ 31 mOhm Max
Current	2.5A Max

VCCPLL_OC has turn-on requirement of 11uS min and 240uS max from EN to 1.1V

3.3V Sensor Switch

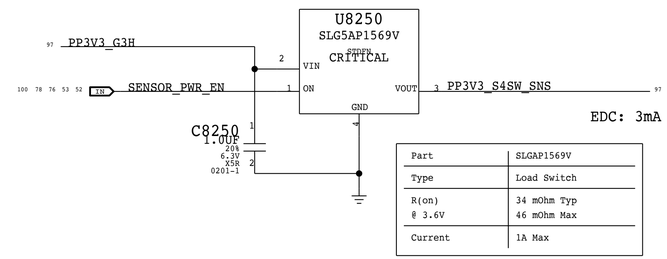

Part	SLGAP1569V
Type	Load Switch
R(on) @ 3.6V	34 mOhm Typ 46 mOhm Max
Current	1A Max

3.3V S0SW TBT X Switch

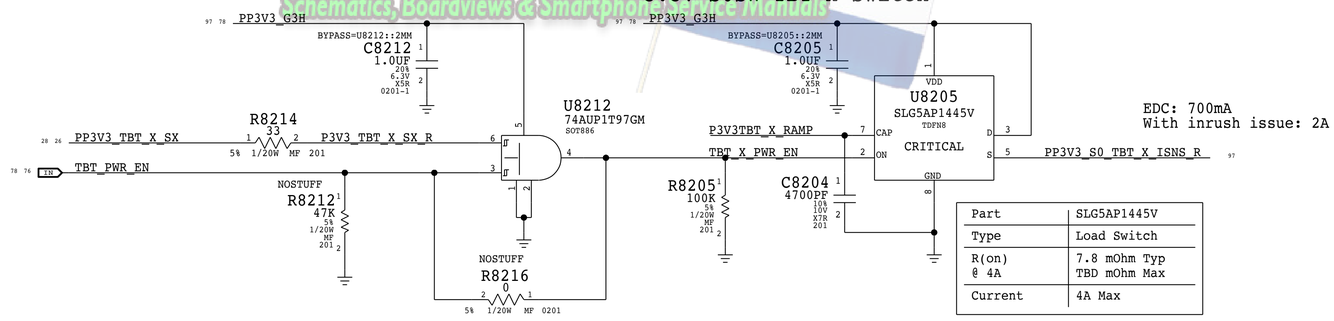

Part	SLG5AP1445V
Type	Load Switch
R(on) @ 4A	7.8 mOhm Typ TBD mOhm Max
Current	4A Max

5V Sensor Switch

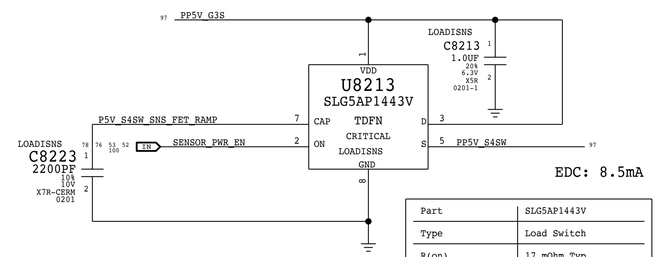

Part	SLG5AP1443V
Type	Load Switch
R(on)	17 mOhm Typ 19 mOhm Max
Current	2.5A

3.3V S0SW TBT T Switch

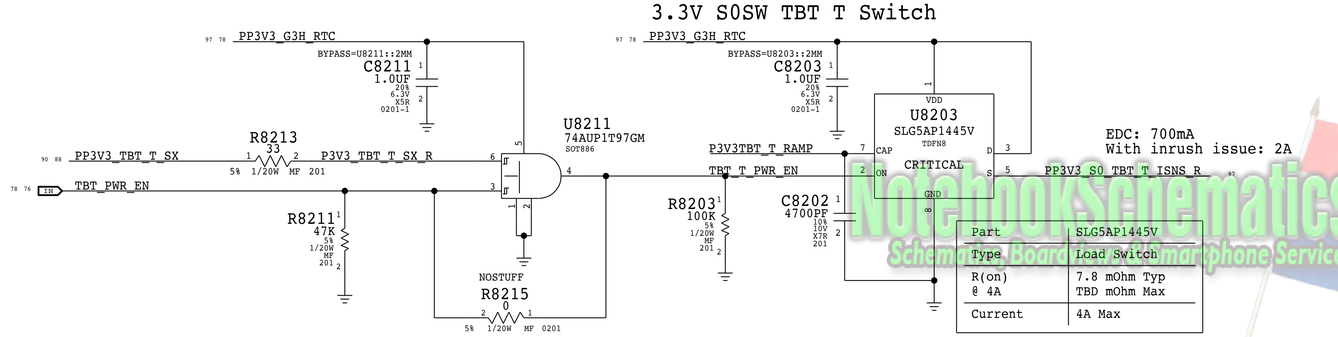

Part	SLG5AP1445V
Type	Load Switch
R(on) @ 4A	7.8 mOhm Typ TBD mOhm Max
Current	4A Max

BOM_COST_GROUP=PLATFORM POWER

STSC_MASTER=J133_J18 STSC_DATE=09/05/2017

PAGE TITLE

Power FETs

Apple Inc.

DRAWING NUMBER	SIZE
051-02166	D
REVISION	4.0.0
BRANCH	evt-mars-0
PAGE	82 OF 150
SHEET	78 OF 108

NOTICE OF PROPRIETARY PROPERTY:
THE INFORMATION CONTAINED HEREIN IS THE PROPRIETARY PROPERTY OF APPLE INC.
THE POSESSOR AGREES TO THE FOLLOWING:
I TO MAINTAIN THIS DOCUMENT IN CONFIDENCE
II NOT TO REPRODUCE OR COPY IT
III NOT TO REVEAL OR PUBLISH IT IN WHOLE OR PART
IV ALL RIGHTS RESERVED

Page Notes

Power aliases required by this page:
- =PPVIN_S0SW_LCDBKLTFET (9-12.6V LCD BACKLIGHT INPUT)
- =PP5V_S0_BKLT (5V BACKLIGHT DRIVER INPUT)

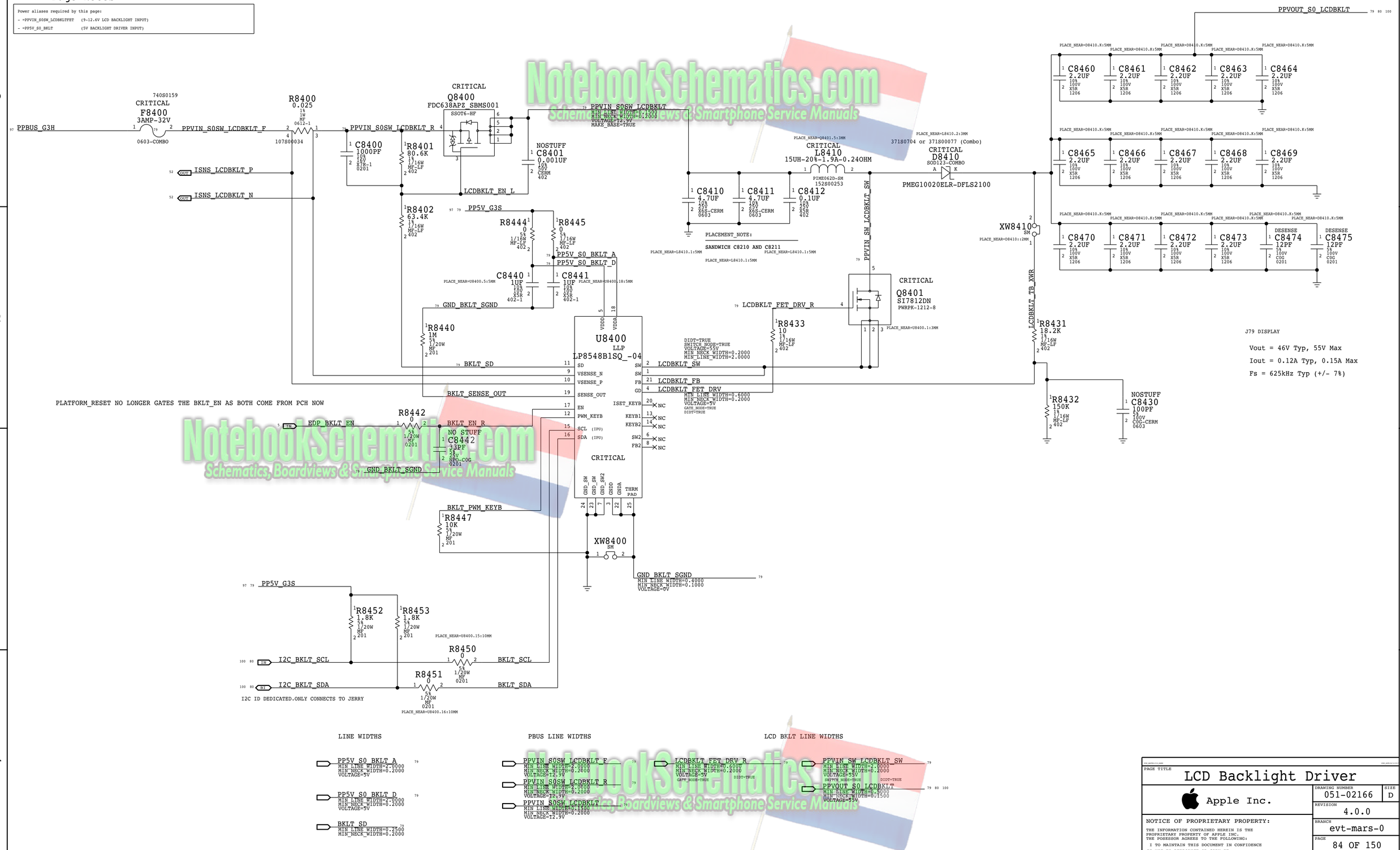

NotebookSchematics.com
Schematics, Boardviews & Smartphone Service Manuals

PAGE TITLE: LCD Backlight Driver

Apple Inc.

DRAWING NUMBER: 051-02166 | SIZE: D

REVISION: 4.0.0

BRANCH: evt-mars-0

PAGE: 84 OF 150

SHEET: 79 OF 108

NOTICE OF PROPRIETARY PROPERTY:
THE INFORMATION CONTAINED HEREIN IS THE PROPRIETARY PROPERTY OF APPLE INC.
THE POSESSOR AGREES TO THE FOLLOWING:
I TO MAINTAIN THIS DOCUMENT IN CONFIDENCE
II NOT TO REPRODUCE OR COPY IT
III NOT TO REVEAL OR PUBLISH IT IN WHOLE OR PART
IV ALL RIGHTS RESERVED

LCD PANEL INTERFACE (eDP) + Camera (MIPI)

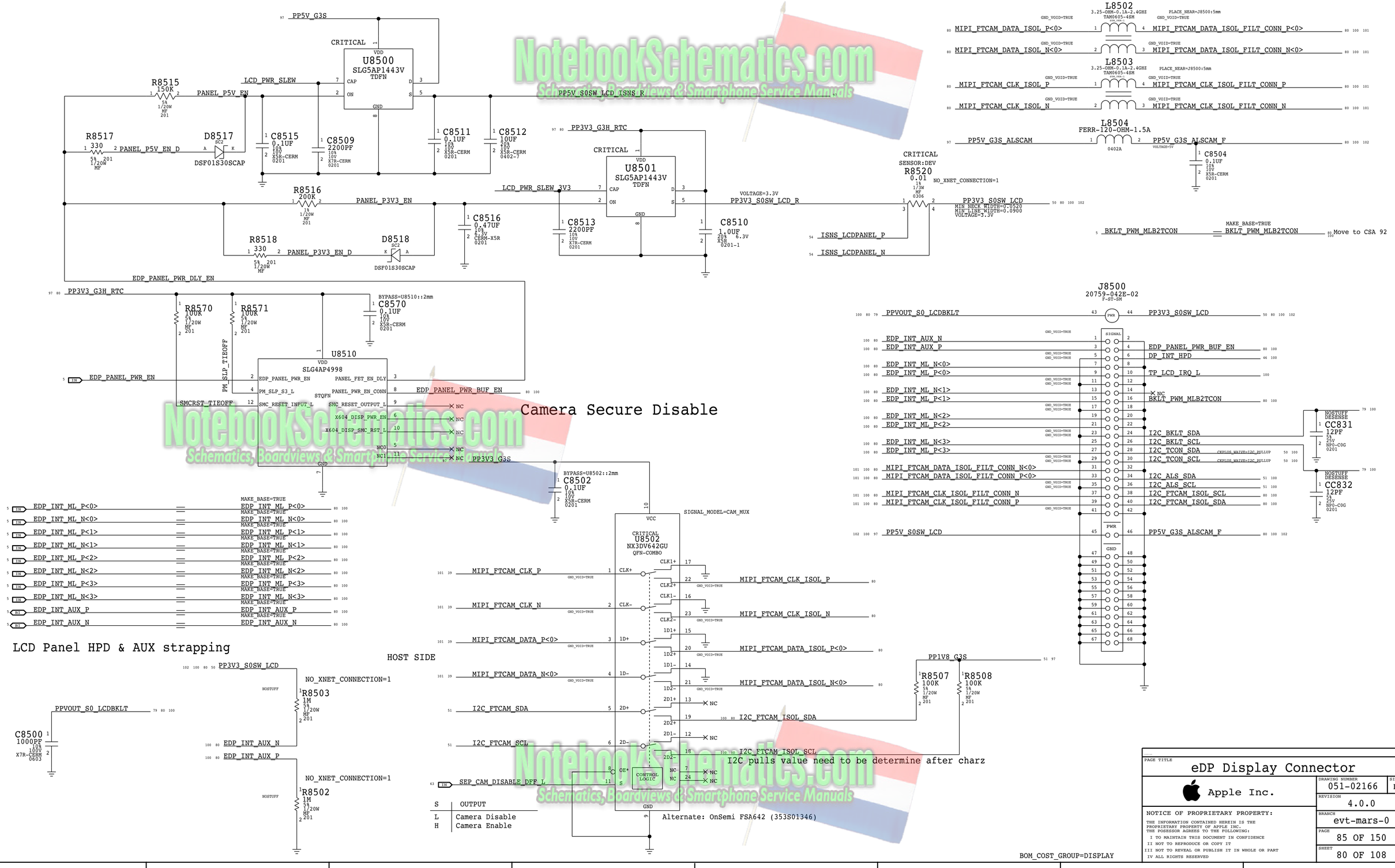

S	OUTPUT
L	Camera Disable
H	Camera Enable

NOTE OF PROPRIETARY PROPERTY:
THE INFORMATION CONTAINED HEREIN IS THE PROPRIETARY PROPERTY OF APPLE INC.
THE POSESSOR AGREES TO THE FOLLOWING:
I TO MAINTAIN THIS DOCUMENT IN CONFIDENCE
II NOT TO REPRODUCE OR COPY IT
III NOT TO REVEAL OR PUBLISH IT IN WHOLE OR PART
IV ALL RIGHTS RESERVED

PAGE TITLE: eDP Display Connector

Apple Inc.

DRAWING NUMBER	051-02166
SIZE	D
REVISION	4.0.0
BRANCH	evt-mars-0
PAGE	85 OF 150
SHEET	80 OF 108

NotebookSchematics.com
Schematics, Boardviews & Smartphone Service Manuals

S4E0

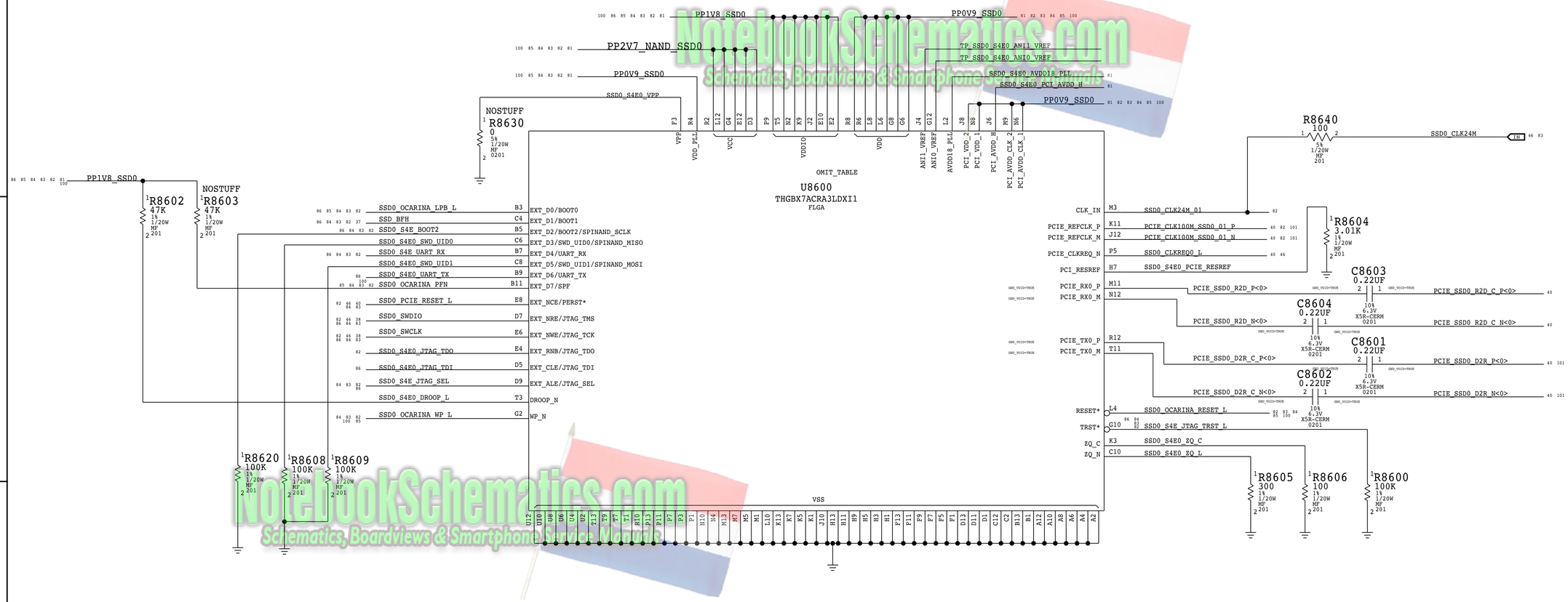

NotebookSchematics.com
Schematics, Boardviews & Smartphone Service Manuals

SYNC_MASTER=J137_GS5_REDHEAD SYNC_DATE=02/17/2017

PAGE TITLE
S4E<0>

Apple Inc.

DRAWING NUMBER 051-02166 SIZE D
REVISION 4.0.0
BRANCH evt-mars-0
PAGE 86 OF 150
SHEET 81 OF 108

NOTICE OF PROPRIETARY PROPERTY:
THE INFORMATION CONTAINED HEREIN IS THE PROPRIETARY PROPERTY OF APPLE INC.
THE POSESSOR AGREES TO THE FOLLOWING:
I TO MAINTAIN THIS DOCUMENT IN CONFIDENCE
II NOT TO REPRODUCE OR COPY IT
III NOT TO REVEAL OR PUBLISH IT IN WHOLE OR PART
IV ALL RIGHTS RESERVED

S4E1

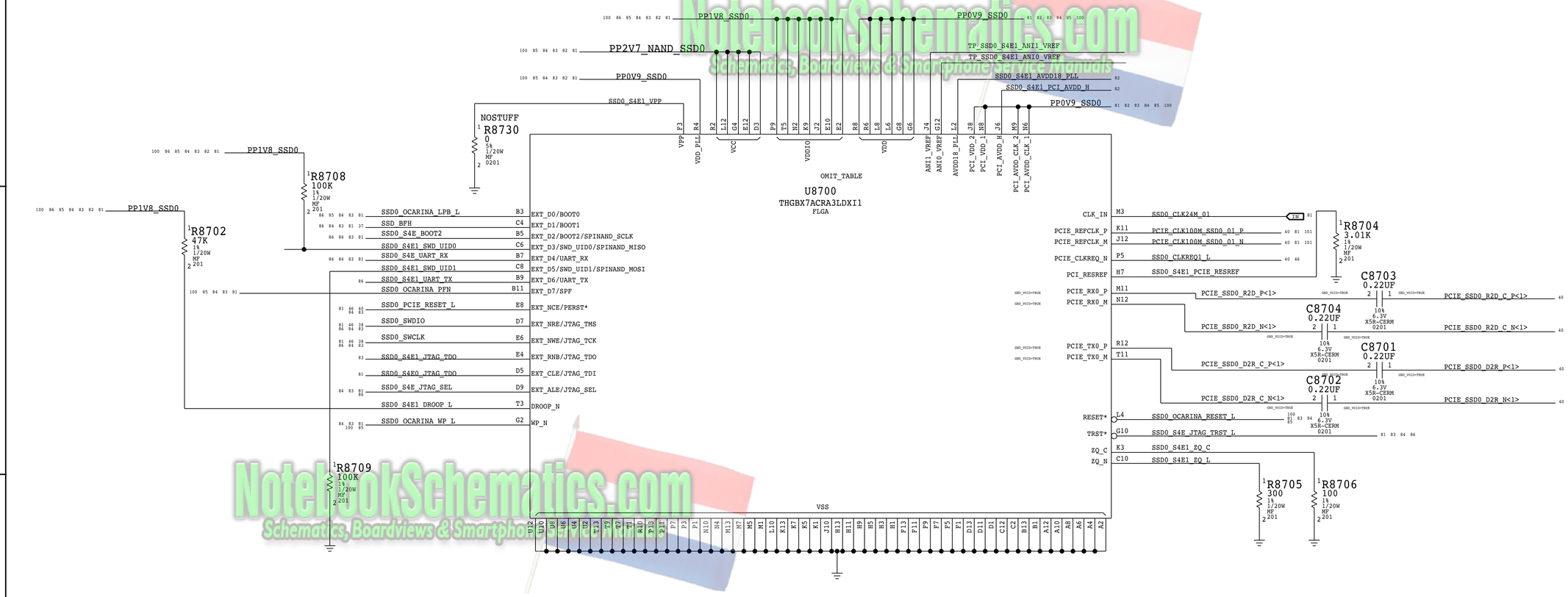

S4E VDD

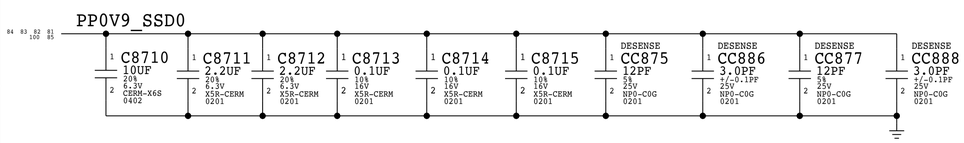

S4E VDDIO

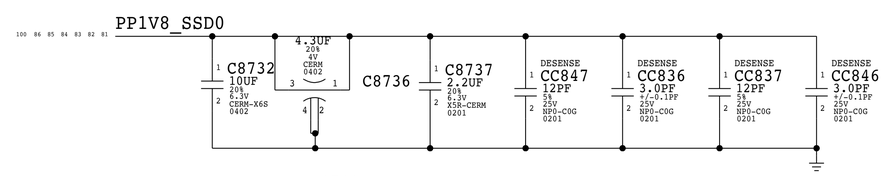

VCC CAP

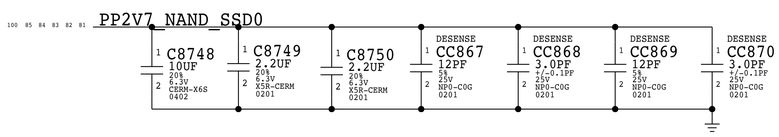

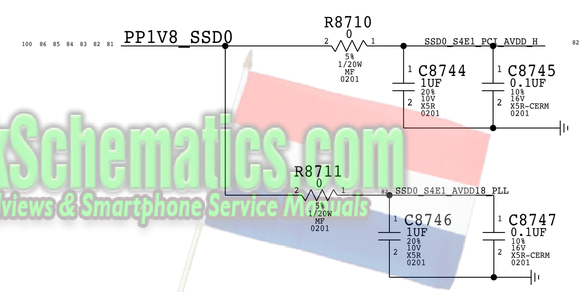

BOM_COST_GROUP=SSD

SYNC_MASTER=J137_GS5_REDHEAD	SYNC_DATE=02/17/2017
PAGE TITLE: S4E<1>	
Apple Inc.	DRAWING NUMBER: 051-02166 / SIZE: D
	REVISION: 4.0.0
NOTICE OF PROPRIETARY PROPERTY: THE INFORMATION CONTAINED HEREIN IS THE PROPRIETARY PROPERTY OF APPLE INC. THE POSESSOR AGREES TO THE FOLLOWING: I TO MAINTAIN THIS DOCUMENT IN CONFIDENCE II NOT TO REPRODUCE OR COPY IT III NOT TO REVEAL OR PUBLISH IT IN WHOLE OR PART IV ALL RIGHTS RESERVED	BRANCH: evt-mars-0
	PAGE: 87 OF 150
	SHEET: 82 OF 108

NotebookSchematics.com
Schematics, Boardviews & Smartphone Service Manuals

S4E2

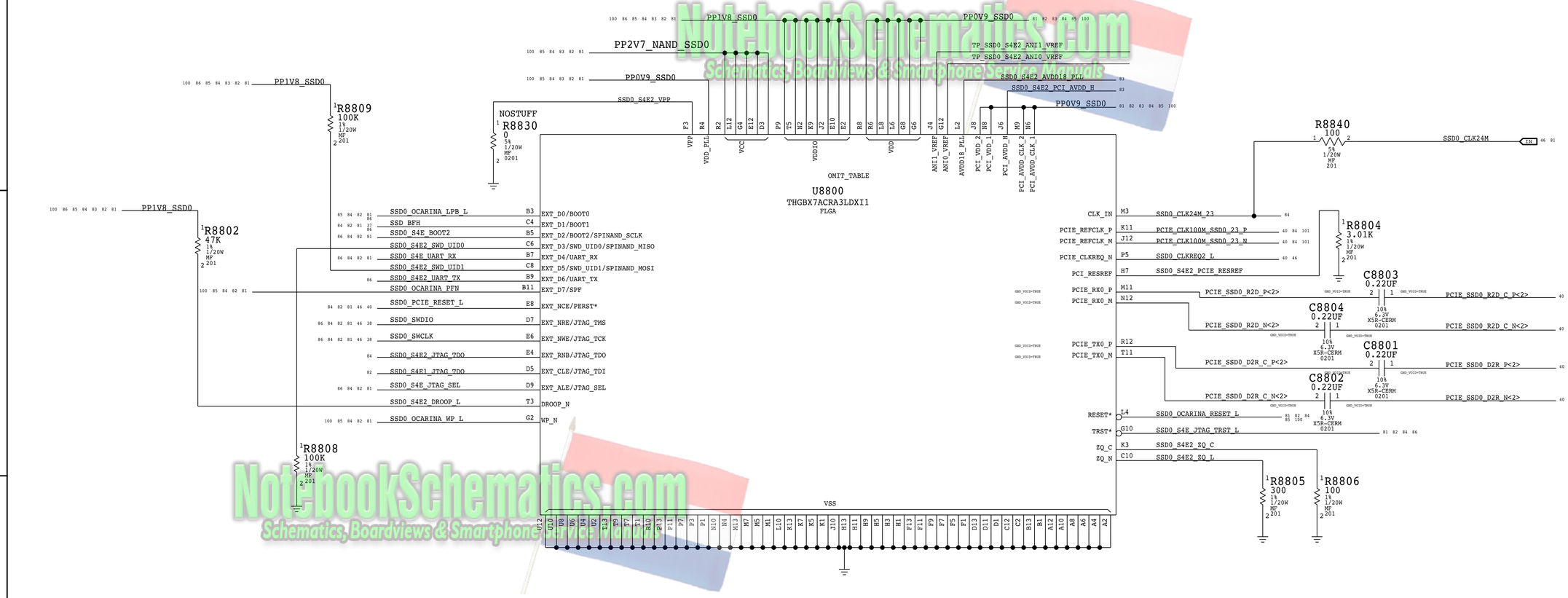

S4E VDD

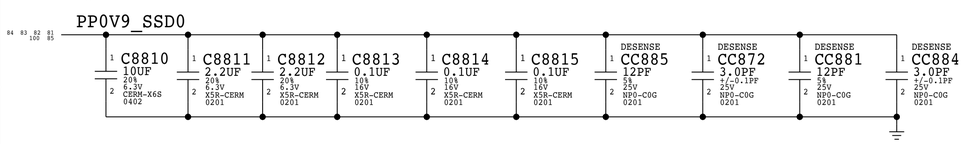

S4E VDDIO

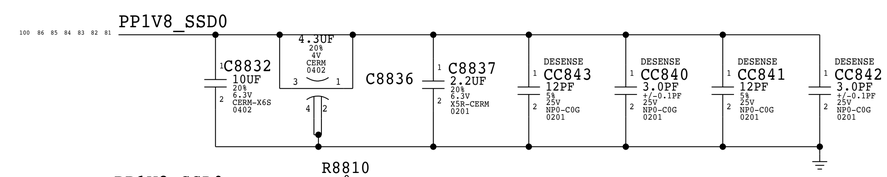

VCC CAP

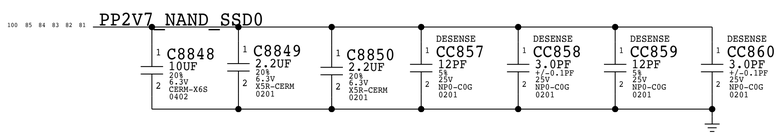

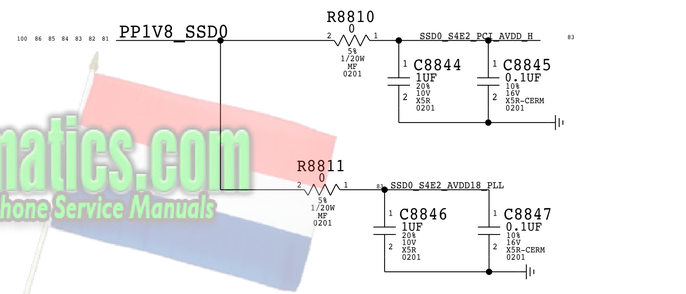

BOM_COST_GROUP=SSD

SYNC_MASTER=J137_GS5_REDHEAD SYNC_DATE=02/17/2017

PAGE TITLE
S4E<2>

Apple Inc.

DRAWING NUMBER 051-02166 SIZE D

REVISION 4.0.0

BRANCH evt-mars-0

PAGE 88 OF 150

SHEET 83 OF 108

NOTICE OF PROPRIETARY PROPERTY:
THE INFORMATION CONTAINED HEREIN IS THE PROPRIETARY PROPERTY OF APPLE INC.
THE POSESSOR AGREES TO THE FOLLOWING:
I TO MAINTAIN THIS DOCUMENT IN CONFIDENCE
II NOT TO REPRODUCE OR COPY IT
III NOT TO REVEAL OR PUBLISH IT IN WHOLE OR PART
IV ALL RIGHTS RESERVED

NotebookSchematics.com
Schematics, Boardviews & Smartphone Service Manuals

S4E3

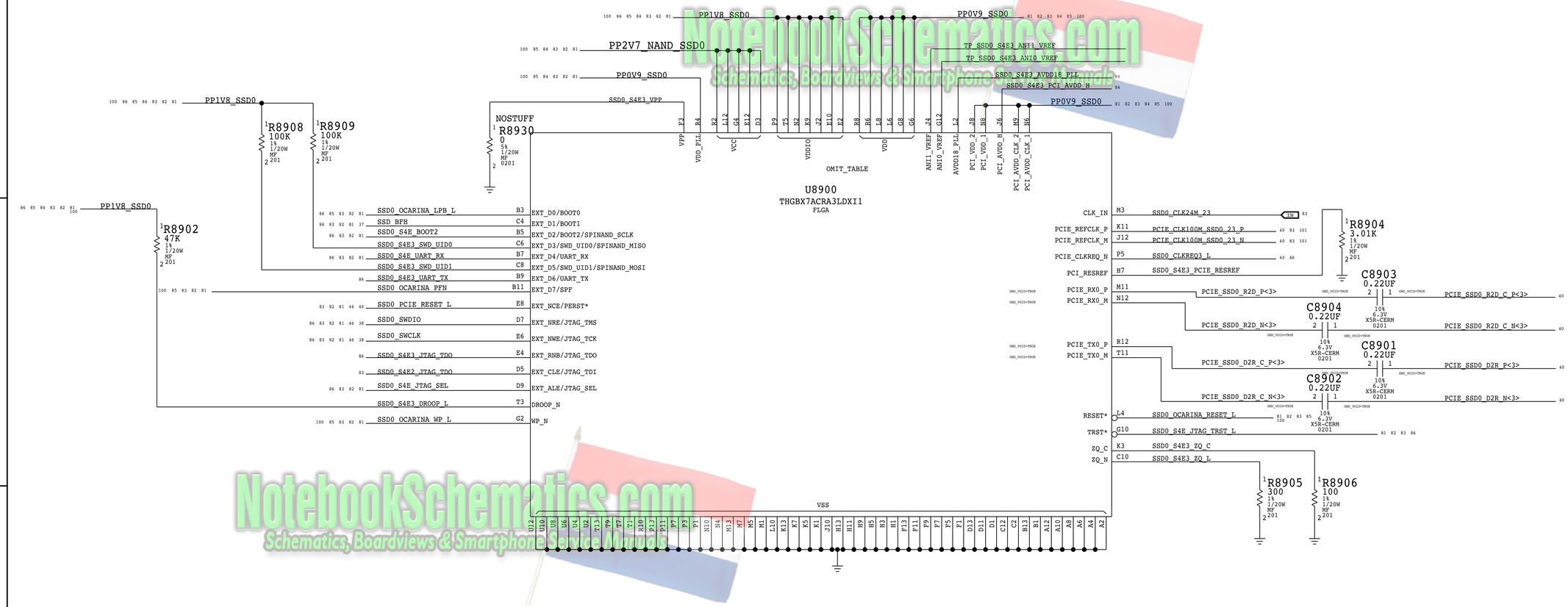

S4E VDD

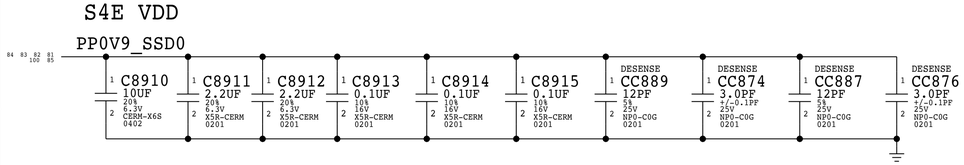

S4E VDDIO

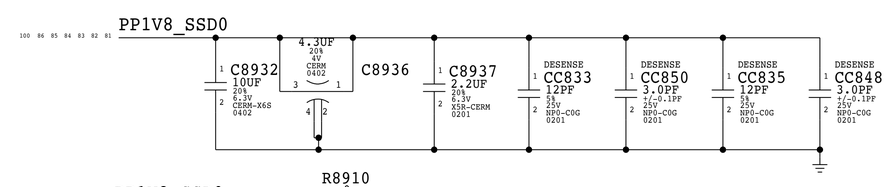

VCC CAP

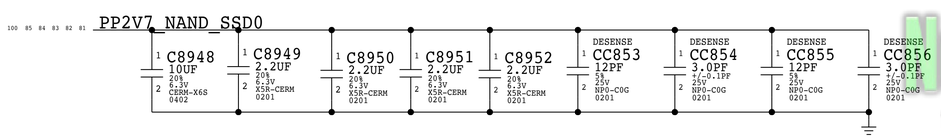

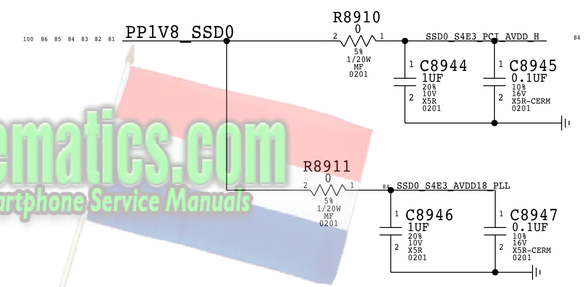

BOM_COST_GROUP=SSD

SYNC_MASTER=J137_GS5_REDHEAD SYNC_DATE=02/17/2017

PAGE TITLE
S4E<3>

Apple Inc.

DRAWING NUMBER 051-02166 SIZE D
REVISION 4.0.0
BRANCH evt-mars-0
PAGE 89 OF 150
SHEET 84 OF 108

NOTICE OF PROPRIETARY PROPERTY:
THE INFORMATION CONTAINED HEREIN IS THE PROPRIETARY PROPERTY OF APPLE INC.
THE POSESSOR AGREES TO THE FOLLOWING:
I TO MAINTAIN THIS DOCUMENT IN CONFIDENCE
II NOT TO REPRODUCE OR COPY IT
III NOT TO REVEAL OR PUBLISH IT IN WHOLE OR PART
IV ALL RIGHTS RESERVED

NotebookSchematics.com
Schematics, Boardviews & Smartphone Service Manuals

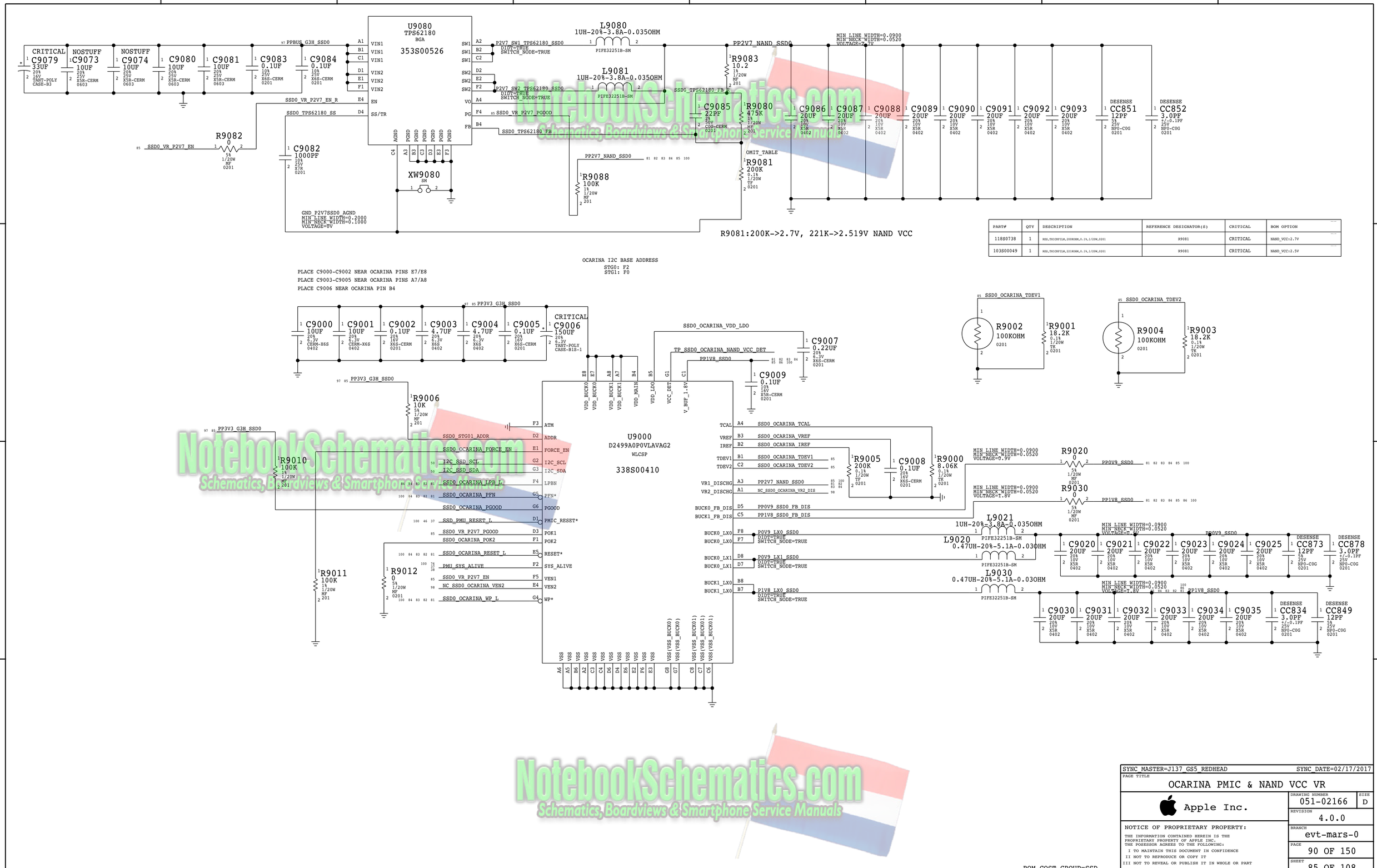

PART#	QTY	DESCRIPTION	REFERENCE DESIGNATOR(S)	CRITICAL	BOM OPTION
118S0738	1	RES,THICKFILM,200KOHM,0.1%,1/20W,0201	R9081	CRITICAL	NAND_VCC:2.7V
103S00049	1	RES,THICKFILM,221KOHM,0.1%,1/20W,0201	R9081	CRITICAL	NAND_VCC:2.5V

SYNC_MASTER=J137_GS5_REDHEAD SYNC_DATE=02/17/2017

PAGE TITLE
OCARINA PMIC & NAND VCC VR

Apple Inc.

DRAWING NUMBER 051-02166 SIZE D

REVISION 4.0.0

BRANCH evt-mars-0

PAGE 90 OF 150

SHEET 85 OF 108

NOTICE OF PROPRIETARY PROPERTY:
THE INFORMATION CONTAINED HEREIN IS THE PROPRIETARY PROPERTY OF APPLE INC.
THE POSESSOR AGREES TO THE FOLLOWING:
I TO MAINTAIN THIS DOCUMENT IN CONFIDENCE
II NOT TO REPRODUCE OR COPY IT
III NOT TO REVEAL OR PUBLISH IT IN WHOLE OR PART
IV ALL RIGHTS RESERVED

NotebookSchematics.com
Schematics, Boardviews & Smartphone Service Manuals

SSD0

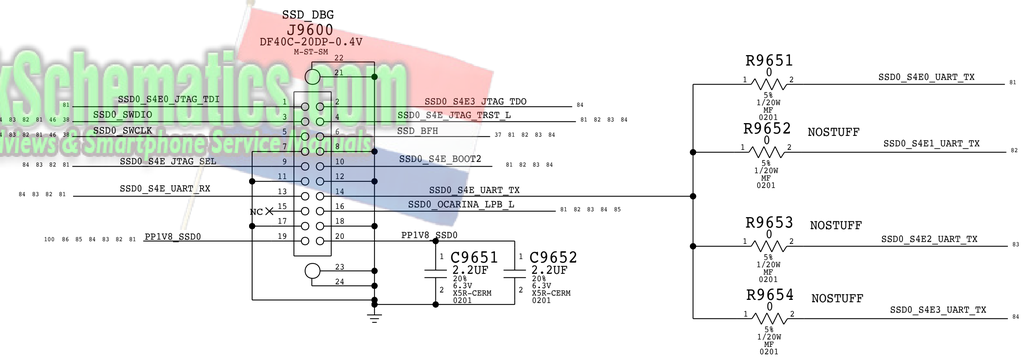

NotebookSchematics.com
Schematics, Boardviews & Smartphone Service Manuals

BOM_COST_GROUP=SSD

SYNC_MASTER=J680_MLB SYNC_DATE=03/20/2017

PAGE TITLE
SSD Support

Apple Inc.

DRAWING NUMBER 051-02166
SIZE D
REVISION 4.0.0
BRANCH evt-mars-0
PAGE 96 OF 150
SHEET 86 OF 108

NOTICE OF PROPRIETARY PROPERTY:
THE INFORMATION CONTAINED HEREIN IS THE PROPRIETARY PROPERTY OF APPLE INC.
THE POSESSOR AGREES TO THE FOLLOWING:
I TO MAINTAIN THIS DOCUMENT IN CONFIDENCE
II NOT TO REPRODUCE OR COPY IT
III NOT TO REVEAL OR PUBLISH IT IN WHOLE OR PART
IV ALL RIGHTS RESERVED

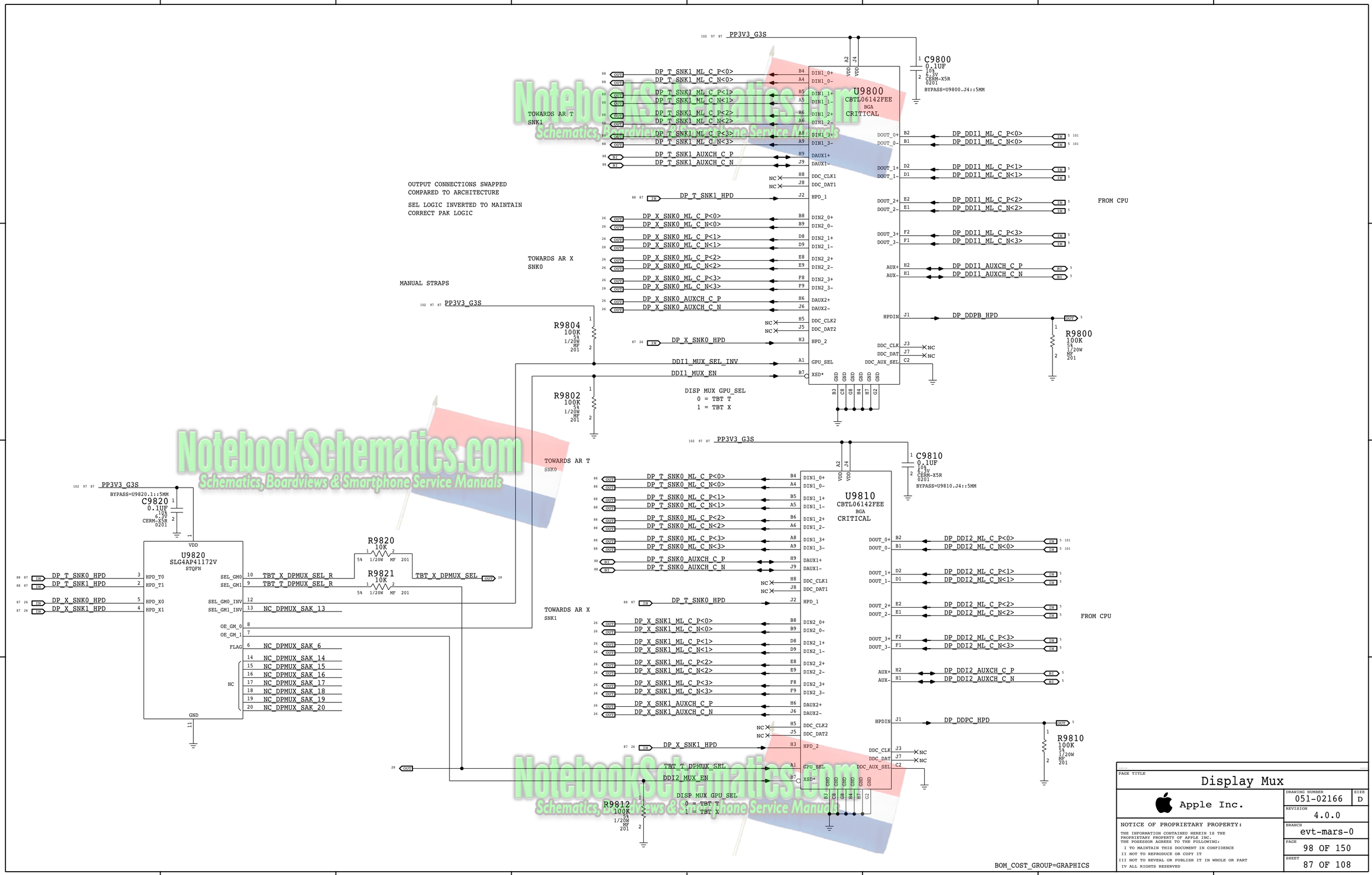
PP3V3_G3S
C9800
0.1UF
10%
6.3V
CERM-X5R
0201
BYPASS=U9800.J4::5MM
U9800
CBTL06142FEE
BGA
CRITICAL
TOWARDS AR T
SNK1
DP_T_SNK1_ML_C_P<0>
DP_T_SNK1_ML_C_N<0>
DP_T_SNK1_ML_C_P<1>
DP_T_SNK1_ML_C_N<1>
DP_T_SNK1_ML_C_P<2>
DP_T_SNK1_ML_C_N<2>
DP_T_SNK1_ML_C_P<3>
DP_T_SNK1_ML_C_N<3>
DP_T_SNK1_AUXCH_C_P
DP_T_SNK1_AUXCH_C_N
DP_T_SNK1_HPD
OUTPUT CONNECTIONS SWAPPED
COMPARED TO ARCHITECTURE
SEL LOGIC INVERTED TO MAINTAIN
CORRECT PAK LOGIC
TOWARDS AR X
SNK0
DP_X_SNK0_ML_C_P<0>
DP_X_SNK0_ML_C_N<0>
DP_X_SNK0_ML_C_P<1>
DP_X_SNK0_ML_C_N<1>
DP_X_SNK0_ML_C_P<2>
DP_X_SNK0_ML_C_N<2>
DP_X_SNK0_ML_C_P<3>
DP_X_SNK0_ML_C_N<3>
DP_X_SNK0_AUXCH_C_P
DP_X_SNK0_AUXCH_C_N
DP_X_SNK0_HPD
MANUAL STRAPS
R9804
100K
5%
1/20W
MF
201
DDI1_MUX_SEL_INV
DDI1_MUX_EN
R9802
100K
5%
1/20W
MF
201
DISP MUX GPU_SEL
0 = TBT T
1 = TBT X
DP_DDI1_ML_C_P<0>
DP_DDI1_ML_C_N<0>
DP_DDI1_ML_C_P<1>
DP_DDI1_ML_C_N<1>
DP_DDI1_ML_C_P<2>
DP_DDI1_ML_C_N<2>
DP_DDI1_ML_C_P<3>
DP_DDI1_ML_C_N<3>
DP_DDI1_AUXCH_C_P
DP_DDI1_AUXCH_C_N
DP_DDPB_HPD
R9800
100K
5%
1/20W
MF
201
FROM CPU
PP3V3_G3S
BYPASS=U9820.1::5MM
C9820
0.1UF
10%
6.3V
CERM-X5R
0201
U9820
SLG4AP41172V
STQFN
DP_T_SNK0_HPD
DP_T_SNK1_HPD
DP_X_SNK0_HPD
DP_X_SNK1_HPD
TBT_X_DPMUX_SEL_R
TBT_T_DPMUX_SEL_R
NC_DPMUX_SAK_13
NC_DPMUX_SAK_6
NC_DPMUX_SAK_14
NC_DPMUX_SAK_15
NC_DPMUX_SAK_16
NC_DPMUX_SAK_17
NC_DPMUX_SAK_18
NC_DPMUX_SAK_19
NC_DPMUX_SAK_20
R9820
10K
5%
1/20W
MF
201
R9821
10K
5%
1/20W
MF
201
TBT_X_DPMUX_SEL
TOWARDS AR T
SNK0
DP_T_SNK0_ML_C_P<0>
DP_T_SNK0_ML_C_N<0>
DP_T_SNK0_ML_C_P<1>
DP_T_SNK0_ML_C_N<1>
DP_T_SNK0_ML_C_P<2>
DP_T_SNK0_ML_C_N<2>
DP_T_SNK0_ML_C_P<3>
DP_T_SNK0_ML_C_N<3>
DP_T_SNK0_AUXCH_C_P
DP_T_SNK0_AUXCH_C_N
DP_T_SNK0_HPD
TOWARDS AR X
SNK1
DP_X_SNK1_ML_C_P<0>
DP_X_SNK1_ML_C_N<0>
DP_X_SNK1_ML_C_P<1>
DP_X_SNK1_ML_C_N<1>
DP_X_SNK1_ML_C_P<2>
DP_X_SNK1_ML_C_N<2>
DP_X_SNK1_ML_C_P<3>
DP_X_SNK1_ML_C_N<3>
DP_X_SNK1_AUXCH_C_P
DP_X_SNK1_AUXCH_C_N
DP_X_SNK1_HPD
TBT_T_DPMUX_SEL
DDI2_MUX_EN
R9812
100K
5%
1/20W
MF
201
U9810
CBTL06142FEE
BGA
CRITICAL
C9810
0.1UF
10%
6.3V
CERM-X5R
0201
BYPASS=U9810.J4::5MM
DP_DDI2_ML_C_P<0>
DP_DDI2_ML_C_N<0>
DP_DDI2_ML_C_P<1>
DP_DDI2_ML_C_N<1>
DP_DDI2_ML_C_P<2>
DP_DDI2_ML_C_N<2>
DP_DDI2_ML_C_P<3>
DP_DDI2_ML_C_N<3>
DP_DDI2_AUXCH_C_P
DP_DDI2_AUXCH_C_N
DP_DDPC_HPD
R9810
100K
5%
1/20W
MF
201
FROM CPU
BOM_COST_GROUP=GRAPHICS
PAGE TITLE
Display Mux
Apple Inc.
DRAWING NUMBER
051-02166
SIZE
D
REVISION
4.0.0
BRANCH
evt-mars-0
PAGE
98 OF 150
SHEET
87 OF 108
NOTICE OF PROPRIETARY PROPERTY:
THE INFORMATION CONTAINED HEREIN IS THE PROPRIETARY PROPERTY OF APPLE INC.
THE POSESSOR AGREES TO THE FOLLOWING:
I TO MAINTAIN THIS DOCUMENT IN CONFIDENCE
II NOT TO REPRODUCE OR COPY IT
III NOT TO REVEAL OR PUBLISH IT IN WHOLE OR PART
IV ALL RIGHTS RESERVED

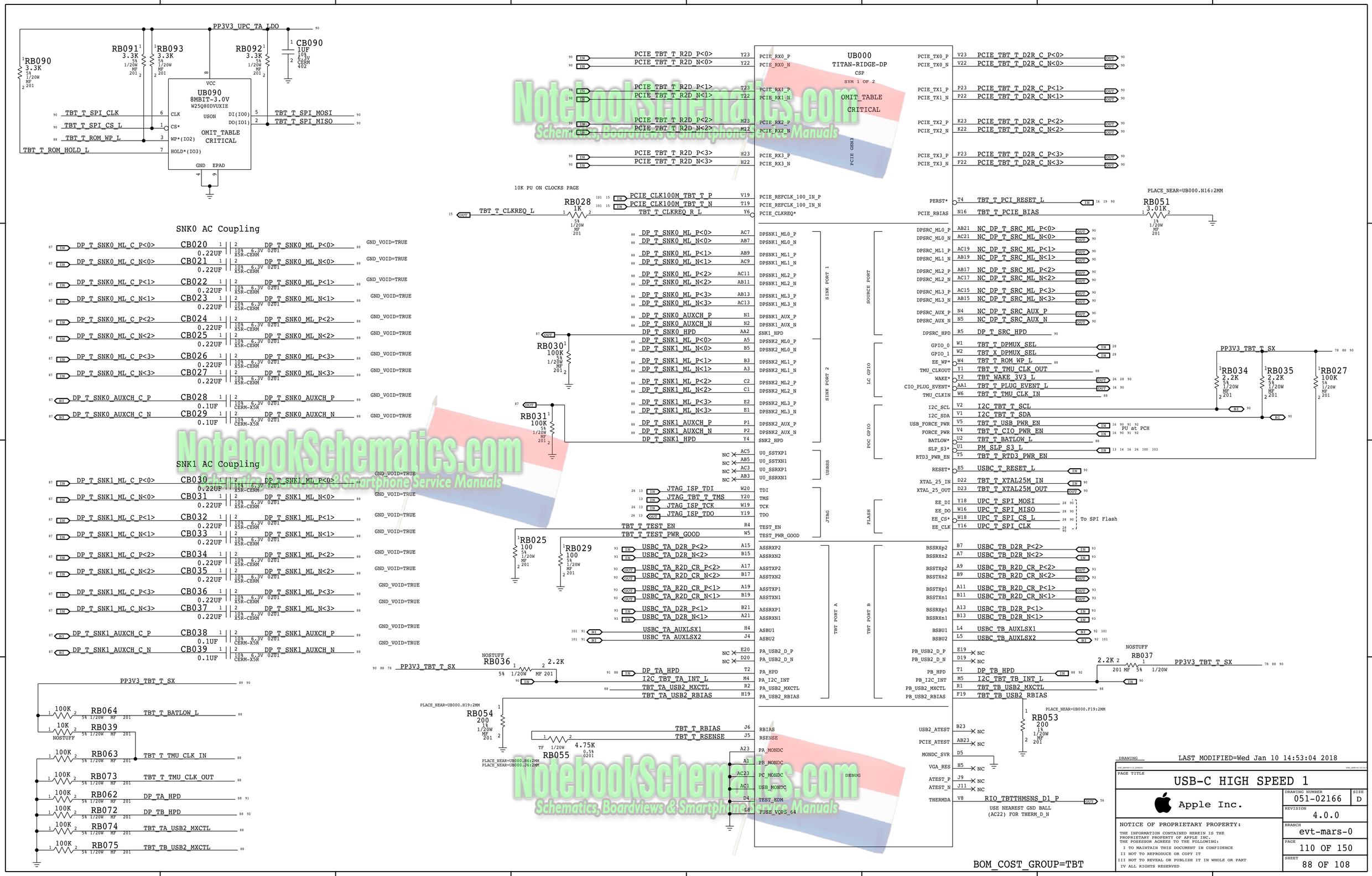

NotebookSchematics.com
Schematics, Boardviews & Smartphone Service Manuals

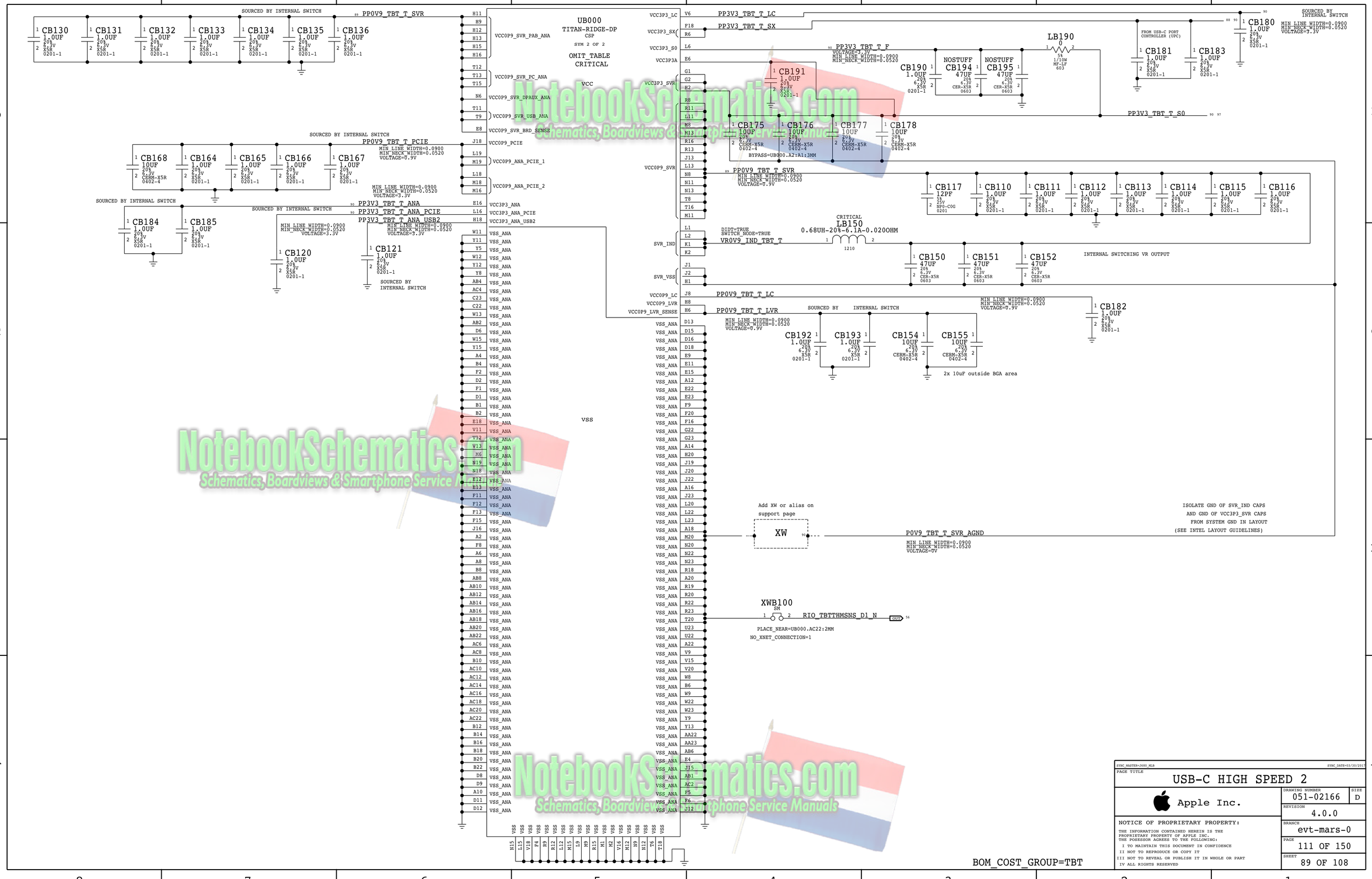

NotebookSchematics.com
Schematics, Boardviews & Smartphone Service Manuals

PAGE TITLE
USB-C HIGH SPEED 2

Apple Inc.

DRAWING NUMBER 051-02166
SIZE D
REVISION 4.0.0
BRANCH evt-mars-0
PAGE 111 OF 150
SHEET 89 OF 108

NOTICE OF PROPRIETARY PROPERTY:
THE INFORMATION CONTAINED HEREIN IS THE PROPRIETARY PROPERTY OF APPLE INC.
THE POSESSOR AGREES TO THE FOLLOWING:
I TO MAINTAIN THIS DOCUMENT IN CONFIDENCE
II NOT TO REPRODUCE OR COPY IT
III NOT TO REVEAL OR PUBLISH IT IN WHOLE OR PART
IV ALL RIGHTS RESERVED

Ridge 0.9V SVR XW

NO_XNET_CONNECTION=1
XWB200
SHORT-LG-SM

P0V9_TBT_T_SVR_AGND

DP SRC OPTIONS

IF DP SRC NOT USED

DP_T_SRC_HPD — RB240 100K 5% 1/20W MF 201

NC_DP_T_SRC_ML_P<0>	NC_DP_T_SRC_ML_P<0>	MAKE_BASE=TRUE NO_TEST=1
NC_DP_T_SRC_ML_P<1>	NC_DP_T_SRC_ML_P<1>	MAKE_BASE=TRUE NO_TEST=1
NC_DP_T_SRC_ML_P<2>	NC_DP_T_SRC_ML_P<2>	MAKE_BASE=TRUE NO_TEST=1
NC_DP_T_SRC_ML_P<3>	NC_DP_T_SRC_ML_P<3>	MAKE_BASE=TRUE NO_TEST=1
NC_DP_T_SRC_ML_N<0>	NC_DP_T_SRC_ML_N<0>	MAKE_BASE=TRUE NO_TEST=1
NC_DP_T_SRC_ML_N<1>	NC_DP_T_SRC_ML_N<1>	MAKE_BASE=TRUE NO_TEST=1
NC_DP_T_SRC_ML_N<2>	NC_DP_T_SRC_ML_N<2>	MAKE_BASE=TRUE NO_TEST=1
NC_DP_T_SRC_ML_N<3>	NC_DP_T_SRC_ML_N<3>	MAKE_BASE=TRUE NO_TEST=1
NC_DP_T_SRC_AUX_P	NC_DP_T_SRC_AUX_P	MAKE_BASE=TRUE NO_TEST=1
NC_DP_T_SRC_AUX_N	NC_DP_T_SRC_AUX_N	MAKE_BASE=TRUE NO_TEST=1

AR xtal

TBT_T_XTAL25M_OUT

CRITICAL
YB200
25MHZ-25PPM-20PF-50OHM
2.00X1.60-SM

CB202 20PF 5% 25V C0G 0201
CB203 20PF 5% 25V C0G 0201

TBT_T_XTAL25M_IN

ARKANOID DEBUG CONN

USBC_DBG — JB201 505070-1222 M-ST-SM — Place on bottom

TBT_T_PLUG_EVENT_L	1	TBT_T_PCI_RESET_L
TBT_WAKE_3V3_L	3	USBC_T_RESET_L
TBT_T_CIO_PWR_EN	5	PP3V3_TBT_T_SX
TBT_T_USB_PWR_EN	7	PP3V3_TBT_T_ANA_PCIE
TBT_POC_RESET	9	PP3V3_TBT_T_ANA
PP3V3_TBT_T_F	11	PP3V3_TBT_T_LC

ACE A/B RPD STRAPPING

USBC_TA_CC1	MAKE_BASE=TRUE USBC_TA_CC1	
USBC_TA_CC2	MAKE_BASE=TRUE USBC_TA_CC2	
USBC_TB_CC1	MAKE_BASE=TRUE USBC_TB_CC1	
USBC_TB_CC2	MAKE_BASE=TRUE USBC_TB_CC2	

ACE FET DCIN Bypass Caps

PPDCIN_G3H

CB211 0.1UF 10% 35V CER-X5R 0201
CB212 0.1UF 10% 35V CER-X5R 0201
CB213 0.1UF 10% 35V CER-X5R 0201
CB214 0.1UF 10% 35V CER-X5R 0201

ACE PDs

UPC_TA_DBG3	RB260	100K 5% 1/20W MF 201
UPC_TA_DBG4	RB261	100K 5% 1/20W MF 201
UPC_TB_DBG1	RB200	100K 5% 1/20W MF 201
UPC_TB_DBG2	RB201	100K 5% 1/20W MF 201
UPC_TB_DBG3	RB262	100K 5% 1/20W MF 201
UPC_TB_DBG4	RB263	100K 5% 1/20W MF 201
UPC_T_5V_EN	RB232	100K 5% 1/20W MF 201
TBT_TA_LSTX	RB235	1M 5% 1/20W MF 201
TBT_TA_LSRX	RB236	1M 5% 1/20W MF 201
TBT_TB_LSTX	RB237	1M 5% 1/20W MF 201
TBT_TB_LSRX	RB238	1M 5% 1/20W MF 201

ARKANOID DEBUG CONN

USBC_DBG — JB200 505070-1222 M-ST-SM — Place on bottom

I2C_TBT_TB_INT_L	1	I2C_TBT_TA_INT_L
I2C_UPC_T_SCL2	3	I2C_TBT_T_SDA
I2C_UPC_T_SDA2	5	I2C_TBT_T_SCL
UPC_I2C_INT_L	7	TBT_T_CIO_PWR_EN
TBT_T_SPI_CLK_DBG	9	TBT_T_USB_PWR_EN
UPC_TA_UART_TX	11	UPC_TA_UART_RX

T ACE-SMC I2C SERIES R'S

I2C_UPC_T_SDA2	RB241	PLACE_NEAR=U3900:13mm 33 5% 1/20W MF 201	I2C_UPC_SDA
I2C_UPC_T_SDA2	MAKE_BASE=TRUE		
I2C_UPC_T_SDA2	CKPLUS_WAIVE=I2C_PULLUP		
I2C_UPC_T_SCL2	RB242	PLACE_NEAR=U3900:13mm 33 5% 1/20W MF 201	I2C_UPC_SCL
I2C_UPC_T_SCL2	MAKE_BASE=TRUE		
I2C_UPC_T_SCL2	CKPLUS_WAIVE=I2C_PULLUP		

FUSES FOR UPC

FB200 0603 CRITICAL PLACE_NEAR=QB300:5MM 6AMP-32V-0.0095OHM
PP20V_USBC_TA_VBUS — PP20V_USBC_TA_VBUS_F

FB201 0603 CRITICAL PLACE_NEAR=QB400:5MM 6AMP-32V-0.0095OHM
PP20V_USBC_TB_VBUS — PP20V_USBC_TB_VBUS_F

GND ALIASES

GND

NC/NO TEST

NO_TEST=1
NC_UPC_TB_I2C_ADDR

NC_UPC_TA_SWD_CLK	NC_UPC_TA_SWD_CLK	MAKE_BASE=TRUE NO_TEST=1
NC_UPC_TA_SWD_DATA	NC_UPC_TA_SWD_DATA	MAKE_BASE=TRUE NO_TEST=1
NC_UPC_TA_GPIO7	NC_UPC_TA_GPIO7	MAKE_BASE=TRUE NO_TEST=1
NC_UPC_TB_GPIO7	NC_UPC_TB_GPIO7	MAKE_BASE=TRUE NO_TEST=1

SIGNAL ALIASES

SMC_DEBUGPRT_TX	SMC_DEBUGPRT_TX	MAKE_BASE=TRUE
SMC_DEBUGPRT_RX	SMC_DEBUGPRT_RX	MAKE_BASE=TRUE
UPC_PMU_RESET	UPC_PMU_RESET	MAKE_BASE=TRUE
UPC_T_5V_EN	UPC_T_5V_EN	MAKE_BASE=TRUE
TBT_POC_RESET	TBT_POC_RESET	MAKE_BASE=TRUE
XDP_USB_EXTC_OC_L	XDP_USB_EXTC_OC_L	MAKE_BASE=TRUE
XDP_USB_EXTD_OC_L	XDP_USB_EXTD_OC_L	MAKE_BASE=TRUE
NC_USBC_TB_RESET_L	NC_USBC_TB_RESET_L	MAKE_BASE=TRUE
USBC_T_RESET_L	USBC_T_RESET_L	MAKE_BASE=TRUE
USB2_UPC_TA_N	USB2_UPC_TA_N	MAKE_BASE=TRUE
USB2_UPC_TA_P	USB2_UPC_TA_P	MAKE_BASE=TRUE
USB2_UPC_TB_N	USB2_UPC_TB_N	MAKE_BASE=TRUE
USB2_UPC_TB_P	USB2_UPC_TB_P	MAKE_BASE=TRUE
TP_UPC_TB_GPIO0	TP_UPC_TB_GPIO0	MAKE_BASE=TRUE
TP_UPC_TB_GPIO1	TP_UPC_TB_GPIO1	MAKE_BASE=TRUE

POWER ALIASES

PP3V3_UPC_TA_LDO	PP3V3_UPC_TA_LDO	MAKE_BASE=TRUE
PP20V_USBC_TA_VBUS	PP20V_USBC_TA_VBUS	MAKE_BASE=TRUE
PP20V_USBC_TB_VBUS	PP20V_USBC_TB_VBUS	MAKE_BASE=TRUE MIN_LINE_WIDTH=0.0900 MIN_NECK_WIDTH=0.0520 VOLTAGE=5V
PP5V_S4_T_USBC	PP5V_S4_T_USBC	MAKE_BASE=TRUE
PP5V_S4_T_USBC		
PP5V_S4_T_USBC		
PP3V3_TBT_T_SX	PP3V3_TBT_T_SX	MAKE_BASE=TRUE
PP3V3_TBT_T_SX	PP3V3_TBT_T_SX	MIN_LINE_WIDTH=0.1500 MIN_NECK_WIDTH=0.2000 VOLTAGE=3.3V
PP3V3_TBT_T_S0	PP3V3_TBT_T_S0	MAKE_BASE=TRUE MIN_LINE_WIDTH=0.0900 MIN_NECK_WIDTH=0.0520 VOLTAGE=3.3V

PP1V8_SLPS2R — QB201 DMN22500FB DFN1006-3 — RB226 100K 201 MF 1/20W 5% — PP3V3_G3H

TBT_WAKE_L — TBT_WAKE_3V3_L

TR/ACE SPI BUS SERIES R'S

TBT_T_SPI_CLK	RB290	100 5% 1/20W MF 201	TBT_T_SPI_CLK_DBG
TBT_T_SPI_CS_L	RB280	15 5% 1/20W MF 201	UPC_TA_SPI_CLK (IN)
TBT_T_SPI_MOSI	RB281	15 5% 1/20W MF 201	UPC_TA_SPI_CS_L (IN)
TBT_T_SPI_MISO	RB282	15 5% 1/20W MF 201	UPC_TA_SPI_MOSI (IN)
	RB283	15 5% 1/20W MF 201	UPC_TA_SPI_MISO (OUT)
	RB284	15 5% 1/20W MF 201	UPC_T_SPI_CLK (IN)
	RB285	15 5% 1/20W MF 201	UPC_T_SPI_CS_L (IN)
	RB286	15 5% 1/20W MF 201	UPC_T_SPI_MOSI (IN)
	RB287	15 5% 1/20W MF 201	UPC_T_SPI_MISO (OUT)

ROM — Ace — TR

TBT to ACE

TBT
Titan Ridge UB000
(MASTER)

I2C_TBT_T_SCL	MAKE_BASE=TRUE
I2C_TBT_T_SDA	MAKE_BASE=TRUE
I2C_TBT_TA_INT_L	MAKE_BASE=TRUE
I2C_TBT_TB_INT_L	MAKE_BASE=TRUE

Pri ACE
UB300
(Write: 0x70 Read: 0x71)

I2C_TBT_T_SCL
I2C_TBT_T_SDA
I2C_TBT_TA_INT_L

Sec ACE
UB400
(Write: 0x7E Read: 0x7F)

I2C_TBT_T_SCL
I2C_TBT_T_SDA
I2C_TBT_TB_INT_L

Ridge PCIE Caps

D2R

PCIE_TBT_T_D2R_C_P<0>	CB250	0.22UF 0201 X5R 6.3V 20% GND_VOID=TRUE	PCIE_TBT_T_D2R_P<0>
PCIE_TBT_T_D2R_C_N<0>	CB251	0.22UF 0201 X5R 6.3V 20% GND_VOID=TRUE	PCIE_TBT_T_D2R_N<0>
PCIE_TBT_T_D2R_C_P<1>	CB252	0.22UF 0201 X5R 6.3V 20% GND_VOID=TRUE	PCIE_TBT_T_D2R_P<1>
PCIE_TBT_T_D2R_C_N<1>	CB253	0.22UF 0201 X5R 6.3V 20% GND_VOID=TRUE	PCIE_TBT_T_D2R_N<1>
PCIE_TBT_T_D2R_C_P<2>	CB254	0.22UF 0201 X5R 6.3V 20% GND_VOID=TRUE	PCIE_TBT_T_D2R_P<2>
PCIE_TBT_T_D2R_C_N<2>	CB255	0.22UF 0201 X5R 6.3V 20% GND_VOID=TRUE	PCIE_TBT_T_D2R_N<2>
PCIE_TBT_T_D2R_C_P<3>	CB256	0.22UF 0201 X5R 6.3V 20% GND_VOID=TRUE	PCIE_TBT_T_D2R_P<3>
PCIE_TBT_T_D2R_C_N<3>	CB257	0.22UF 0201 X5R 6.3V 20% GND_VOID=TRUE	PCIE_TBT_T_D2R_N<3>

R2D

PCIE_TBT_T_R2D_C_P<0>	CB240	0.22UF 0201 X5R 6.3V 20% GND_VOID=TRUE	PCIE_TBT_T_R2D_P<0>
PCIE_TBT_T_R2D_C_N<0>	CB241	0.22UF 0201 X5R 6.3V 20% GND_VOID=TRUE	PCIE_TBT_T_R2D_N<0>
PCIE_TBT_T_R2D_C_P<1>	CB242	0.22UF 0201 X5R 6.3V 20% GND_VOID=TRUE	PCIE_TBT_T_R2D_P<1>
PCIE_TBT_T_R2D_C_N<1>	CB243	0.22UF 0201 X5R 6.3V 20% GND_VOID=TRUE	PCIE_TBT_T_R2D_N<1>
PCIE_TBT_T_R2D_C_P<2>	CB244	0.22UF 0201 X5R 6.3V 20% GND_VOID=TRUE	PCIE_TBT_T_R2D_P<2>
PCIE_TBT_T_R2D_C_N<2>	CB245	0.22UF 0201 X5R 6.3V 20% GND_VOID=TRUE	PCIE_TBT_T_R2D_N<2>
PCIE_TBT_T_R2D_C_P<3>	CB246	0.22UF 0201 X5R 6.3V 20% GND_VOID=TRUE	PCIE_TBT_T_R2D_P<3>
PCIE_TBT_T_R2D_C_N<3>	CB247	0.22UF 0201 X5R 6.3V 20% GND_VOID=TRUE	PCIE_TBT_T_R2D_N<3>

BOM_COST_GROUP=TBT

PAGE TITLE: USB-C Support

Apple Inc.

DRAWING NUMBER: 051-02166 SIZE: D
REVISION: 4.0.0
BRANCH: evt-mars-0
PAGE: 112 OF 150
SHEET: 90 OF 108

NOTICE OF PROPRIETARY PROPERTY:
THE INFORMATION CONTAINED HEREIN IS THE PROPRIETARY PROPERTY OF APPLE INC.
THE POSESSOR AGREES TO THE FOLLOWING:
I TO MAINTAIN THIS DOCUMENT IN CONFIDENCE
II NOT TO REPRODUCE OR COPY IT
III NOT TO REVEAL OR PUBLISH IT IN WHOLE OR PART
IV ALL RIGHTS RESERVED

NotebookSchematics.com
Schematics, Boardviews & Smartphone Service Manuals

PRIMARY ACE USB-C PORT CONTROLLER (UPC)

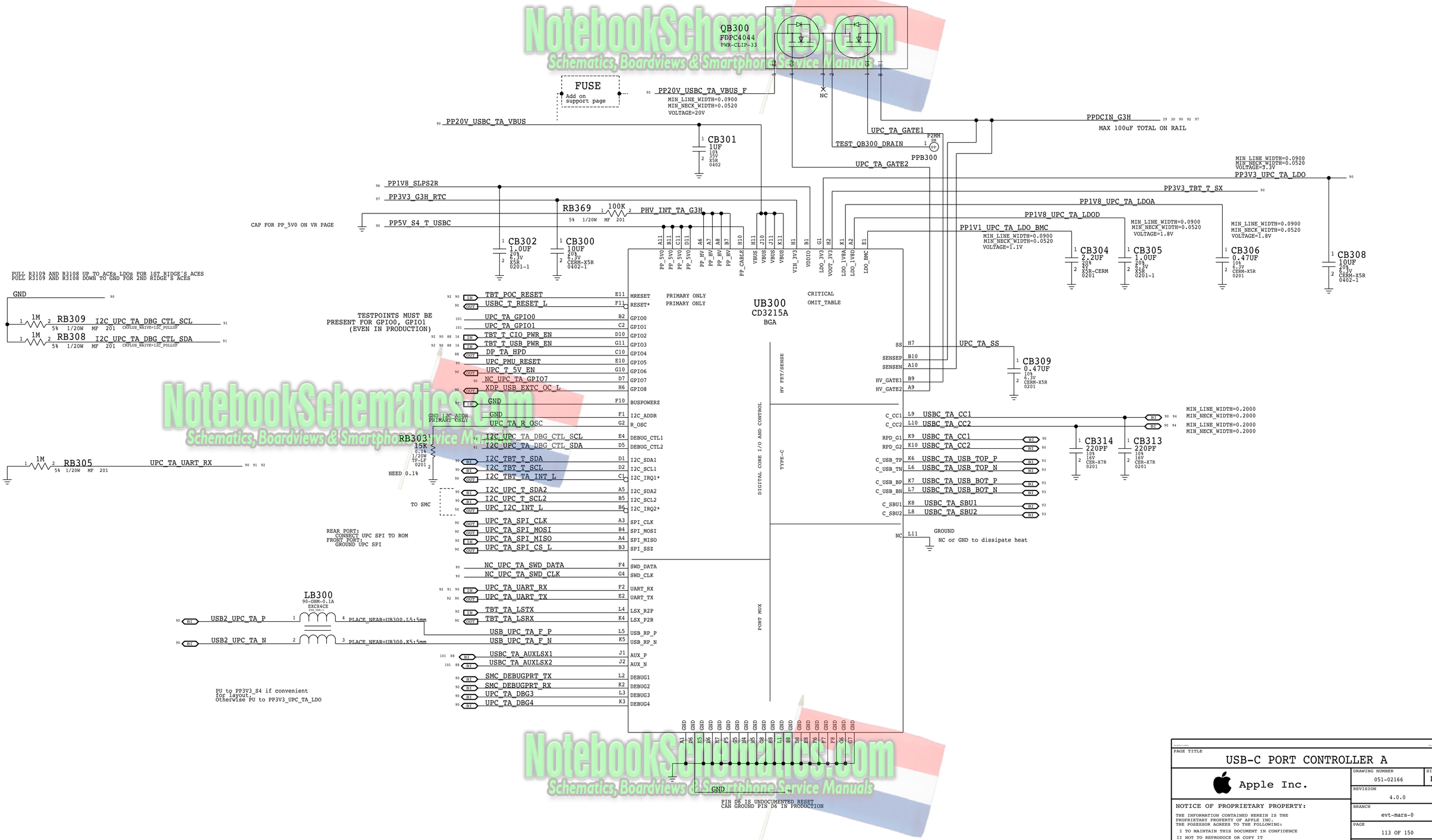

NotebookSchematics.com
Schematics, Boardviews & Smartphone Service Manuals

PAGE TITLE
USB-C PORT CONTROLLER A

Apple Inc.

DRAWING NUMBER 051-02166
SIZE D
REVISION 4.0.0
BRANCH evt-mars-0
PAGE 113 OF 150
SHEET 91 OF 108

NOTICE OF PROPRIETARY PROPERTY:
THE INFORMATION CONTAINED HEREIN IS THE PROPRIETARY PROPERTY OF APPLE INC.
THE POSESSOR AGREES TO THE FOLLOWING:
I TO MAINTAIN THIS DOCUMENT IN CONFIDENCE
II NOT TO REPRODUCE OR COPY IT
III NOT TO REVEAL OR PUBLISH IT IN WHOLE OR PART
IV ALL RIGHTS RESERVED

SECONDARY ACE USB-C PORT CONTROLLER (UPC)

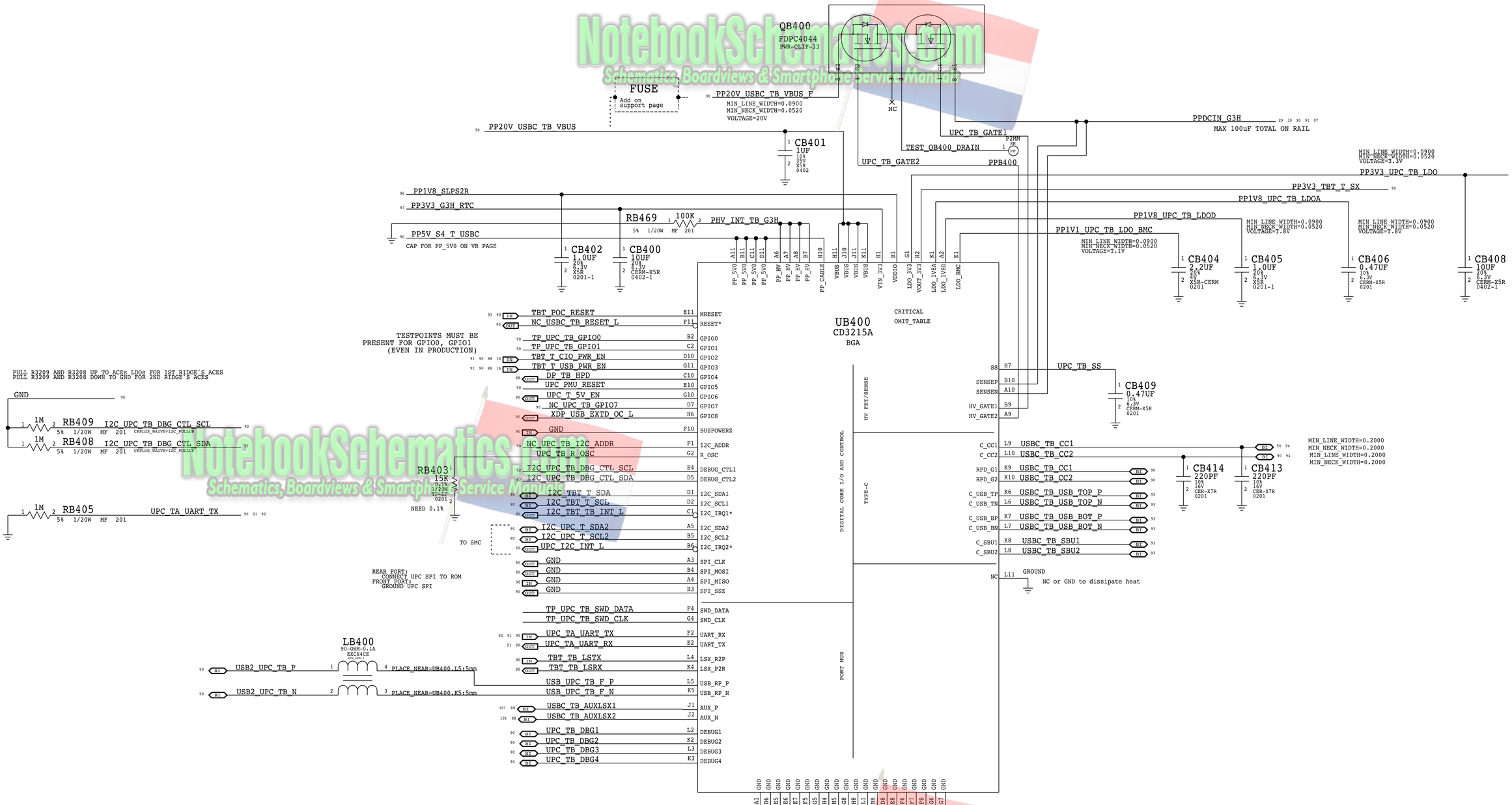

BOM_COST_GROUP=USB-C

PAGE TITLE
USB-C PORT CONTROLLER B

Apple Inc.

DRAWING NUMBER 051-02166 SIZE D
REVISION 4.0.0
BRANCH evt-mars-0
PAGE 114 OF 150
SHEET 92 OF 108

NOTICE OF PROPRIETARY PROPERTY:
THE INFORMATION CONTAINED HEREIN IS THE PROPRIETARY PROPERTY OF APPLE INC.
THE POSESSOR AGREES TO THE FOLLOWING:
I TO MAINTAIN THIS DOCUMENT IN CONFIDENCE
II NOT TO REPRODUCE OR COPY IT
III NOT TO REVEAL OR PUBLISH IT IN WHOLE OR PART
IV ALL RIGHTS RESERVED

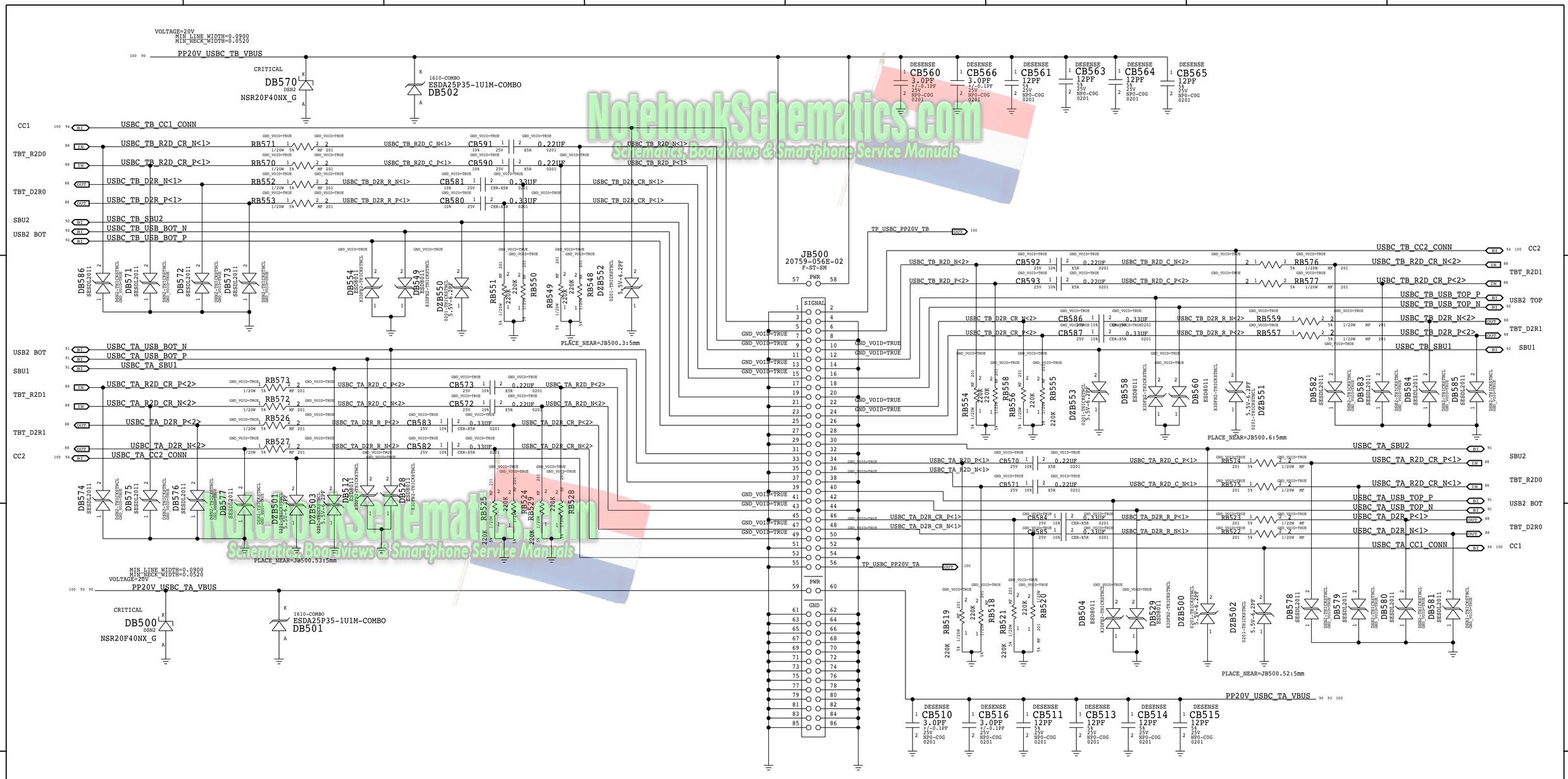

NotebookSchematics.com
Schematics, Boardviews & Smartphone Service Manuals

BOM_COST_GROUP=USB-C

LAST CHANGE: Wed Apr 1 22:57:37 2015

PAGE TITLE
USB-C CONNECTOR A

Apple Inc.

DRAWING NUMBER: 051-02166
SIZE: D
REVISION: 4.0.0
BRANCH: evt-mars-0
PAGE: 115 OF 150
SHEET: 93 OF 108

NOTICE OF PROPRIETARY PROPERTY:
THE INFORMATION CONTAINED HEREIN IS THE PROPRIETARY PROPERTY OF APPLE INC.
THE POSESSOR AGREES TO THE FOLLOWING:
I TO MAINTAIN THIS DOCUMENT IN CONFIDENCE
II NOT TO REPRODUCE OR COPY IT
III NOT TO REVEAL OR PUBLISH IT IN WHOLE OR PART
IV ALL RIGHTS RESERVED

TA CC Protection

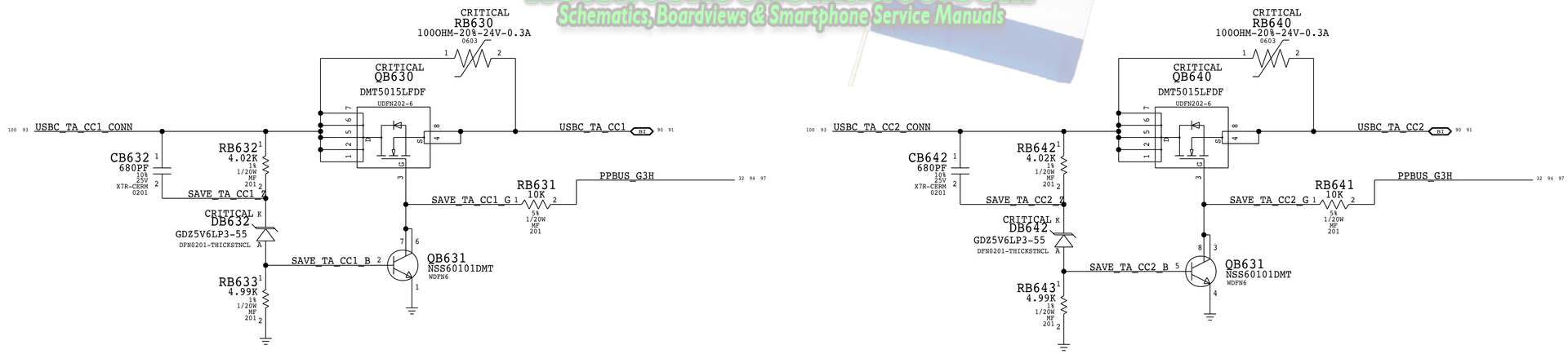

TB CC Protection

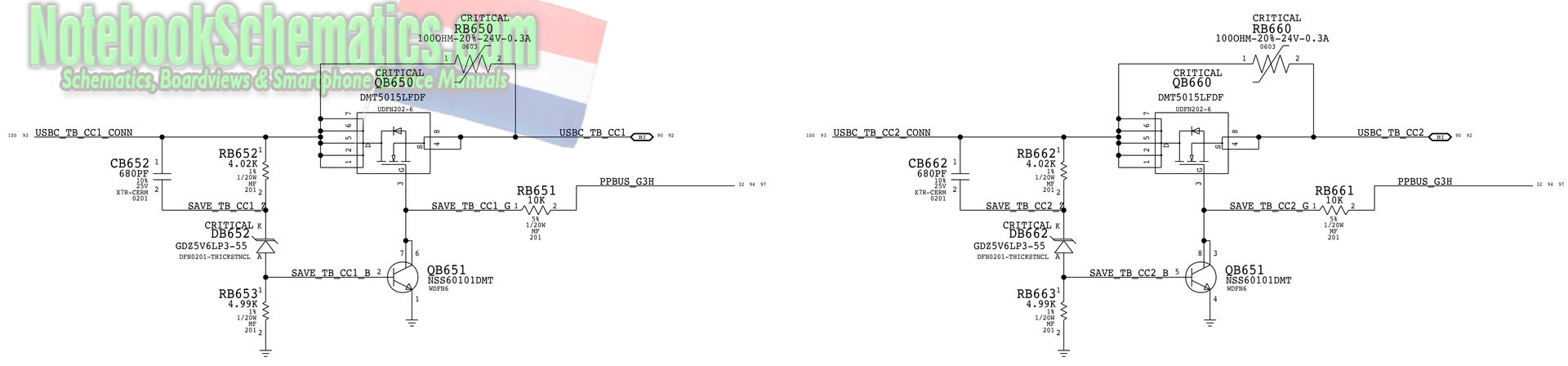

BOM_COST_GROUP=USB-C

DESIGN: X1032/MLB P4BP
LAST CHANGE: Fri Jan 6 16:01:21 2017

PAGE TITLE
USBC T Connector Support

Apple Inc.

DRAWING NUMBER 051-02166
SIZE D
REVISION 4.0.0
BRANCH evt-mars-0
PAGE 116 OF 150
SHEET 94 OF 108

NOTICE OF PROPRIETARY PROPERTY:
THE INFORMATION CONTAINED HEREIN IS THE PROPRIETARY PROPERTY OF APPLE INC.
THE POSSESSOR AGREES TO THE FOLLOWING:
I TO MAINTAIN THIS DOCUMENT IN CONFIDENCE
II NOT TO REPRODUCE OR COPY IT
III NOT TO REVEAL OR PUBLISH IT IN WHOLE OR PART
IV ALL RIGHTS RESERVED

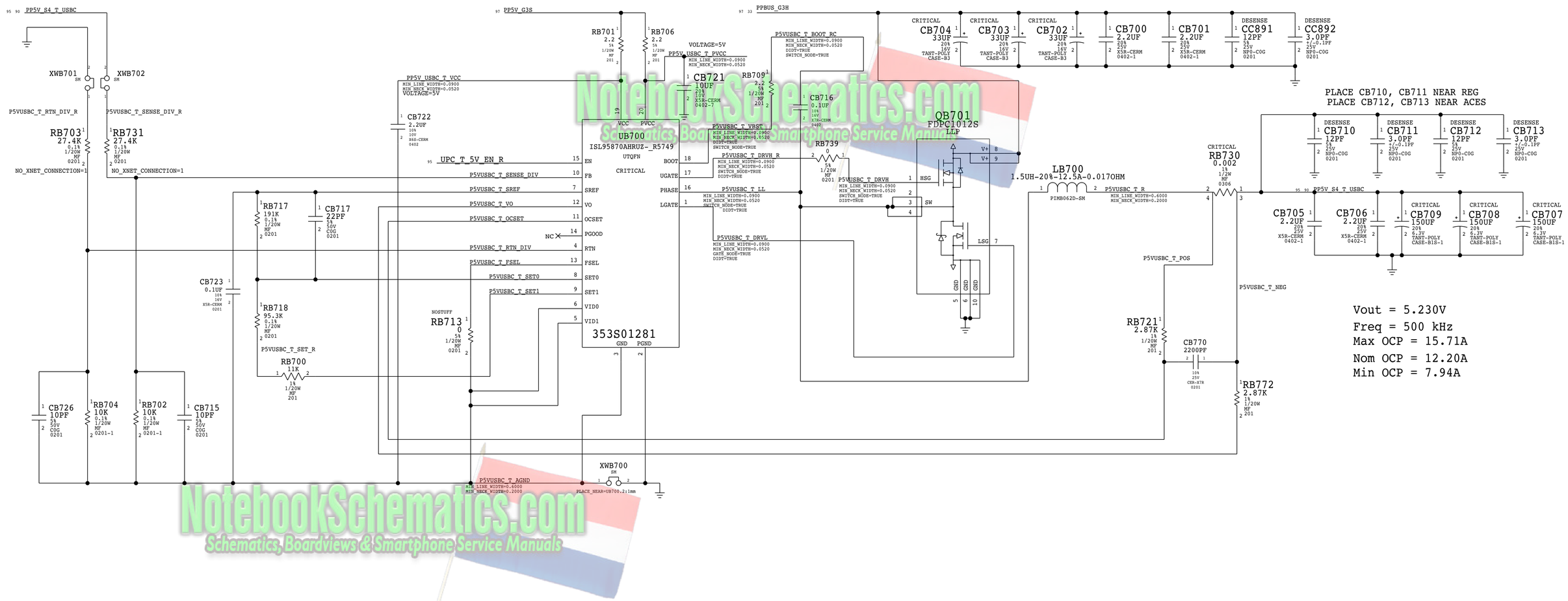

UPC T 5V EN QUALIFIER

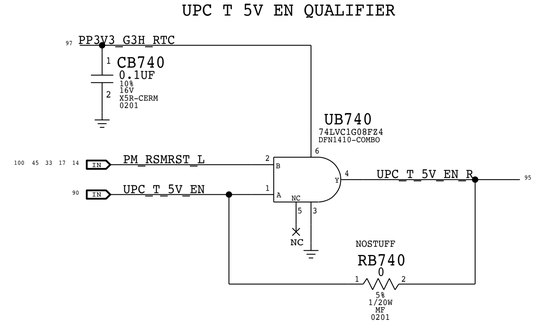

BOM_COST_GROUP=USB-C

PAGE TITLE	TBT 5V REGULATOR
Apple Inc.	DRAWING NUMBER 051-02166 SIZE D
	REVISION 4.0.0
	BRANCH evt-mars-0
	PAGE 117 OF 150
	SHEET 95 OF 108

NOTICE OF PROPRIETARY PROPERTY:
THE INFORMATION CONTAINED HEREIN IS THE PROPRIETARY PROPERTY OF APPLE INC.
THE POSESSOR AGREES TO THE FOLLOWING:
I TO MAINTAIN THIS DOCUMENT IN CONFIDENCE
II NOT TO REPRODUCE OR COPY IT
III NOT TO REVEAL OR PUBLISH IT IN WHOLE OR PART
IV ALL RIGHTS RESERVED

NotebookSchematics.com
Schematics, Boardviews & Smartphone Service Manuals

PMIC Buck0 - SoC VDD_CPU

PPVDDCPU_AWAKE
Sourced from 3V3 G3H
Enabled by

PPVDDCPU_AWAKE
MIN_LINE_WIDTH=0.4000
MIN_NECK_WIDTH=0.0550
VOLTAGE=1.06V
MAKE_BASE=TRUE

PPVDDCPU_AWAKE

PMIC Buck1 - SoC VDD_CPU_SRAM

PPVDDCPUSRAM_AWAKE
Sourced from 3V3 G3H
Enabled by

PPVDDCPUSRAM_AWAKE
MIN_LINE_WIDTH=0.4000
MIN_NECK_WIDTH=0.0550
VOLTAGE=1.06V
MAKE_BASE=TRUE

PPVDDCPUSRAM_AWAKE

PMIC Buck2 - SoC VDD_SOC

PP0V82_SLPDDR
Sourced from 3V3 G3H
Enabled by

PP0V82_SLPDDR
MIN_LINE_WIDTH=0.7000
MIN_NECK_WIDTH=0.0550
VOLTAGE=0.82V
MAKE_BASE=TRUE

PP0V82_SLPDDR

PMIC BUCK3 - SoC AOP/SMC/VDD1

PP1V8_SLPS2R
Sourced from 3V3 G3H
Enabled by

PP1V8_SLPS2R
MIN_LINE_WIDTH=0.2000
MIN_NECK_WIDTH=0.1000
VOLTAGE=1.8V
MAKE_BASE=TRUE

PP1V8_SLPS2R

PMIC BUCK3 SW 1

PP1V8_AWAKE
Sourced from PP1V8_SLPS2R
Enabled by

PP1V8_AWAKE
MIN_LINE_WIDTH=0.0900
MIN_NECK_WIDTH=0.0520
VOLTAGE=1.8V
MAKE_BASE=TRUE

PP1V8_AWAKE

PMIC BUCK3 SW 3

PP1V8_S5
Sourced from PP1V8_SLPS2R
Enabled by

PP1V8_S5
MIN_LINE_WIDTH=0.0900
MIN_NECK_WIDTH=0.0520
VOLTAGE=3.3V
MAKE_BASE=TRUE

PP1V8_S5

PMIC BUCK3 SW 4 - VDD1

PP1V8_S3
Sourced from PP1V8_SLPS2R
Enabled by

PP1V8_S3
MIN_LINE_WIDTH=0.1000
MIN_NECK_WIDTH=0.0550
VOLTAGE=1.8V
MAKE_BASE=TRUE

PP1V8_S3

PP1V8_S3_MEM

PP1V8_S3_MEM
MIN_LINE_WIDTH=0.1000
MIN_NECK_WIDTH=0.0550
VOLTAGE=1.8V
MAKE_BASE=TRUE

PP1V8_S3_MEM

PMIC BUCK3 SW 5

NC_PP1V8_S0
Sourced from PP1V8_SLPS2R
Enabled by

NC_PP1V8_S0
MAKE_BASE=TRUE

PMIC Buck4 - SDRAM VDD2

PP1V1_SLPS2R
Sourced from 3V3_G3H
Enabled by

PP1V1_SLPS2R
MIN_LINE_WIDTH=0.5000
MIN_NECK_WIDTH=0.0550
VOLTAGE=1.1V
MAKE_BASE=TRUE

PP1V1_SLPS2R

U7901 - VDDIO_DDR & PLL

PP1V1_SLPDDR
Sourced from
Enabled by

PP1V1_SLPDDR
MIN_LINE_WIDTH=0.2000
MIN_NECK_WIDTH=0.0550
VOLTAGE=1.1V
MAKE_BASE=TRUE

PP1V1_SLPDDR

PMIC Buck5 - VDD_FIXED

PP0V9_SLPDDR
Sourced from 3V3_G3H
Enabled by

PP0V9_SLPDDR
MIN_LINE_WIDTH=0.3000
MIN_NECK_WIDTH=0.0550
VOLTAGE=0.9V
MAKE_BASE=TRUE

PP0V9_SLPDDR

PMIC Buck7 - VCCPRIM_CORE

PPVPCORE_S5
Sourced from 3V3_G3H
Enabled by

PPVPCORE_S5
MIN_LINE_WIDTH=0.5000
MIN_NECK_WIDTH=0.0550
VOLTAGE=1.05V
MAKE_BASE=TRUE

PPVPCORE_S5

PMIC Buck8

PP1V_PRIM
Sourced from 3V3_G3H
Enabled by

PP1V_PRIM
MIN_LINE_WIDTH=0.0900
MIN_NECK_WIDTH=0.0520
VOLTAGE=1.05V
MAKE_BASE=TRUE

PP1V_PRIM

PMIC Buck8 SW 2 - VCCPLL, VCCST

PP1V_S3
Sourced from PP1V05_PRIM
Enabled by

PP1V_S3
MIN_LINE_WIDTH=0.0900
MIN_NECK_WIDTH=0.0520
VOLTAGE=1.05V
MAKE_BASE=TRUE

PP1V_S3

PMIC LDO0 - VDD_LOW

PP0V8_SLPS2R
Sourced from PP1V1_SLP2R
Enabled by

PP0V8_SLPS2R
MIN_LINE_WIDTH=0.1000
MIN_NECK_WIDTH=0.0550
VOLTAGE=1.06V
MAKE_BASE=TRUE

PP0V8_SLPS2R

PMIC LDO1 - PCH VCCRTC

PP3V_G3H_RTC
Sourced from PP3V3_G3H
Enabled by

PP3V_G3H_RTC
MIN_LINE_WIDTH=0.1000
MIN_NECK_WIDTH=0.0550
VOLTAGE=3V
MAKE_BASE=TRUE

PP3V_G3H_RTC

PMIC LDO2 - PCIE_REFBUF/PLL

PP1V2_AWAKE
Sourced from PP1V8_SLPS2R
Enabled by

PP1V2_AWAKE
MIN_LINE_WIDTH=0.1000
MIN_NECK_WIDTH=0.0550
VOLTAGE=1.2V
MAKE_BASE=TRUE

PP1V2_AWAKE

PMIC HIO SW - VCCSTG

PP1V_S0SW
Sourced from PP1V05_PRIM
Enabled by CPU_C10_GATE_L

PP1V_S0SW
MIN_LINE_WIDTH=0.0900
MIN_NECK_WIDTH=0.0520
VOLTAGE=1V
MAKE_BASE=TRUE

PP1V_S0SW

PMIC V3P3 SW 1 - USB

PP3V3_AWAKE
Sourced from 3V3_G3H
Enabled by

PP3V3_AWAKE
MIN_LINE_WIDTH=0.1000
MIN_NECK_WIDTH=0.0550
VOLTAGE=3.3V
MAKE_BASE=TRUE

PP3V3_AWAKE

PMIC V3P3 SW 2 -

PP3V3_S5
Sourced from 3V3_G3H
Enabled by

PP3V3_S5
MIN_LINE_WIDTH=0.0900
MIN_NECK_WIDTH=0.0520
VOLTAGE=3.3V
MAKE_BASE=TRUE

PP3V3_S5

NotebookSchematics.com
Schematics, Boardviews & Smartphone Service Manuals

PAGE TITLE
Power Aliases - 1

Apple Inc.

DRAWING NUMBER 051-02166
SIZE D
REVISION 4.0.0
BRANCH evt-mars-0
PAGE 120 OF 150
SHEET 96 OF 108

NOTICE OF PROPRIETARY PROPERTY:
THE INFORMATION CONTAINED HEREIN IS THE PROPRIETARY PROPERTY OF APPLE INC.
THE POSESSOR AGREES TO THE FOLLOWING:
I TO MAINTAIN THIS DOCUMENT IN CONFIDENCE
II NOT TO REPRODUCE OR COPY IT
III NOT TO REVEAL OR PUBLISH IT IN WHOLE OR PART
IV ALL RIGHTS RESERVED

PBUS Rails

U7000 - PBUS

PPBUS_G3H
MIN_LINE_WIDTH=0.0900
MIN_NECK_WIDTH=0.0520
VOLTAGE=13.1V
MAKE_BASE=TRUE

PPBUS_HS_CPU
MIN_LINE_WIDTH=0.0900
MIN_NECK_WIDTH=0.2500
VOLTAGE=13.1V
MAKE_BASE=TRUE

PPVIN_G3H_P5VG3S
MIN_LINE_WIDTH=0.0900
MIN_NECK_WIDTH=0.0520
VOLTAGE=13.1V
MAKE_BASE=TRUE

PPVIN_G3H_P3V3G3H
MIN_LINE_WIDTH=0.0900
MIN_NECK_WIDTH=0.0520
VOLTAGE=13.1V
MAKE_BASE=TRUE

PPVIN_G3H_P3V3G3HRTC
MIN_LINE_WIDTH=0.0900
MIN_NECK_WIDTH=0.0520
VOLTAGE=13.1V
MAKE_BASE=TRUE

PPBUS_G3H_SSD0
MIN_LINE_WIDTH=0.0900
MIN_NECK_WIDTH=0.0520
VOLTAGE=13.1V
MAKE_BASE=TRUE

PPBUS_G3H_SPKRAMP_LEFT
MIN_LINE_WIDTH=0.0900
MIN_NECK_WIDTH=0.0520
VOLTAGE=13.1V
MAKE_BASE=TRUE

PPBUS_G3H_SPKRAMP_RIGHT
MIN_LINE_WIDTH=0.0900
MIN_NECK_WIDTH=0.0520
VOLTAGE=13.1V
MAKE_BASE=TRUE

PPDCIN_G3H
MIN_LINE_WIDTH=0.2000
MIN_NECK_WIDTH=0.1000
VOLTAGE=20V
MAKE_BASE=TRUE

5V Rails

U7600 - 5V G3S

PP5V_G3S
Sourced from PBus
Enabled by P5VG3S_EN
MIN_LINE_WIDTH=0.0900
MIN_NECK_WIDTH=0.0520
VOLTAGE=5V
MAKE_BASE=TRUE

PP5V_G3S_CPUREG
MIN_LINE_WIDTH=0.0900
MIN_NECK_WIDTH=0.0520
VOLTAGE=5V
MAKE_BASE=TRUE

PP5V_G3S_TPAD
MIN_LINE_WIDTH=0.0900
MIN_NECK_WIDTH=0.0520
VOLTAGE=5V
MAKE_BASE=TRUE

PP5V_G3S_KBD
MIN_LINE_WIDTH=0.6000
MIN_NECK_WIDTH=0.2500
VOLTAGE=5V
MAKE_BASE=TRUE

5V Rails Continued

PP5V_G3S_ALSCAM
MIN_LINE_WIDTH=0.0900
MIN_NECK_WIDTH=0.0520
VOLTAGE=5V
MAKE_BASE=TRUE

PP5V_S4SW
MIN_LINE_WIDTH=0.0900
MIN_NECK_WIDTH=0.0520
VOLTAGE=5V
MAKE_BASE=TRUE

PP5V_S4SW_ISNS
MIN_LINE_WIDTH=0.6000
MIN_NECK_WIDTH=0.2000
VOLTAGE=5V
MAKE_BASE=TRUE

PP5V_S0SW_LCD_ISNS_R
MIN_LINE_WIDTH=0.0900
MIN_NECK_WIDTH=0.0520
VOLTAGE=5V
MAKE_BASE=TRUE

PP5V_S0SW_LCD
MIN_LINE_WIDTH=0.0900
MIN_NECK_WIDTH=0.0520
VOLTAGE=5V
MAKE_BASE=TRUE

U7550 - 5V LDO - UNUSED

PP5V_S5_LDO
MIN_LINE_WIDTH=0.0900
MIN_NECK_WIDTH=0.0520
VOLTAGE=5V
MAKE_BASE=TRUE

3V3 Rails

U6960 - 3V3_G3H_RTC

PP3V3_G3H_RTC
Sourced from PBus
Enabled by CHGR_EN_MVR
MIN_LINE_WIDTH=0.2000
MIN_NECK_WIDTH=0.0550
VOLTAGE=3.3V
MAKE_BASE=TRUE

PP3V3_G3H_SSD0
MIN_LINE_WIDTH=0.0900
MIN_NECK_WIDTH=0.0520
VOLTAGE=3.3V
MAKE_BASE=TRUE

PP3V3_G3H_RTC_MESA
MIN_LINE_WIDTH=0.0900
MIN_NECK_WIDTH=0.0520
VOLTAGE=3.3V
MAKE_BASE=TRUE

U7660 - 3V3_G3H

PP3V3_G3H
Sourced from PBus
Enabled by PMU_VDDMAIN_EN
VOUT_RTC sourced from
PP3V3_G3H_RTC input to PMIC
MIN_LINE_WIDTH=0.0900
MIN_NECK_WIDTH=0.0520
VOLTAGE=3.3V
MAKE_BASE=TRUE

PP3V3_G3H_PMU_VDDMAIN
MIN_LINE_WIDTH=0.0900
MIN_NECK_WIDTH=0.0520
VOLTAGE=3.3V
MAKE_BASE=TRUE

PP3V3_G3H_DFR
MIN_LINE_WIDTH=0.0900
MIN_NECK_WIDTH=0.0520
VOLTAGE=3.3V
MAKE_BASE=TRUE

U8250 - 3V3 Sensors

PP3V3_S4SW_SNS
Sourced from 3V3_G3H_RTC
Enabled by SENSOR_PWR_EN
MIN_LINE_WIDTH=0.0900
MIN_NECK_WIDTH=0.0520
VOLTAGE=3.3V
MAKE_BASE=TRUE

3V3 Rails Continued

U8200 - 3V3_G3S

PP3V3_G3S
Sourced from 3V3_G3H_RTC
Enabled by P3V3G3S_EN
MIN_LINE_WIDTH=0.0900
MIN_NECK_WIDTH=0.0520
VOLTAGE=3.3V
MAKE_BASE=TRUE

U8205 - 3V3_TBT_X_S0

PP3V3_S0_TBT_X_ISNS_R
Sourced from 3V3_G3H
Enabled by TBT_PWR_EN
MIN_LINE_WIDTH=0.0900
MIN_NECK_WIDTH=0.0520
VOLTAGE=3.3V
MAKE_BASE=TRUE

PP3V3_TBT_X_S0

U8203 - 3V3_TBT_T_S0

PP3V3_S0_TBT_T_ISNS_R
Sourced from 3V3_G3H_RTC
Enabled by TBT_PWR_EN
MIN_LINE_WIDTH=0.0900
MIN_NECK_WIDTH=0.0520
VOLTAGE=3.3V
MAKE_BASE=TRUE

PP3V3_TBT_T_S0

CPU/PCH Rails

U7100, U7210, U7220 (IMVP9) - VCCCORE

PPVCC_S0_CPU
Sourced from PBus
Enabled by CPU_VR_EN
MIN_LINE_WIDTH=0.0900
MIN_NECK_WIDTH=0.0520
VOLTAGE=1.5V
MAKE_BASE=TRUE

U7100, U7270 (IMVP9) - VCCSA

PPVCCSA_S0_CPU
MIN_LINE_WIDTH=0.0900
MIN_NECK_WIDTH=0.0520
VOLTAGE=1.8V
MAKE_BASE=TRUE

U7100, U7410, U7420, U7430 (IMVP9) - VCCGT

PPVCCGT_S0_CPU
MIN_LINE_WIDTH=0.0900
MIN_NECK_WIDTH=0.0520
VOLTAGE=1.5V
MAKE_BASE=TRUE

U7710 - VCCEDRAM

PPVCCEDRAM_S0_CPU
Sourced from PBus
Enabled by PM_OPC_ZVM_L
&& PVCCEDRAM_EN
MIN_LINE_WIDTH=0.0900
MIN_NECK_WIDTH=0.0520
VOLTAGE=1V
MAKE_BASE=TRUE

U8110 - VCCIO

PPVCCIO_S0_CPU
Sourced from PBus
Enabled by CPU_C10_GATE_L
&& PVCCIO_EN
MIN_LINE_WIDTH=0.0900
MIN_NECK_WIDTH=0.0520
VOLTAGE=0.95V
MAKE_BASE=TRUE

U8207 - VCCPLL_OC_SW

PP1V2_S0SW
Sourced from PP1V2_S3
Enabled by CPU_C10_GATE_L
&& PVCCPLLOC_EN
MIN_LINE_WIDTH=0.0900
MIN_NECK_WIDTH=0.0520
VOLTAGE=1.2V
MAKE_BASE=TRUE

Digital Ground

GND
VOLTAGE=0V
MIN_LINE_WIDTH=0.0600
MIN_NECK_WIDTH=0.0700

3V3 Rails Continued

PP3V3_G3S_WLANBT
PP3V3_G3S_TPAD
PP3V3_G3S_KBD
MIN_LINE_WIDTH=0.0900
MIN_NECK_WIDTH=0.0520
VOLTAGE=3.3V
MAKE_BASE=TRUE

1V8 Rails

U8220 - 1V8_G3S

PP1V8_G3S
Sourced from 1V8 SLEEPS2R
Enabled by P1V8G3S_EN
MIN_LINE_WIDTH=0.1000
MIN_NECK_WIDTH=0.2000
VOLTAGE=1.8V
MAKE_BASE=TRUE

PP1V8_G3S_WLANBT_VDDIO
MIN_LINE_WIDTH=0.0900
MIN_NECK_WIDTH=0.0520
VOLTAGE=1.8V
MAKE_BASE=TRUE

Memory Rails

U8100 - Memory VDD2

PP1V2_S3
Sourced from PBUS
Enabled by PVDDQ_EN
MIN_LINE_WIDTH=0.0900
MIN_NECK_WIDTH=0.0520
VOLTAGE=1.2V
MAKE_BASE=TRUE

PP1V2_S3_CPUDDR

PP0V6_S0_DDRVTT
MIN_LINE_WIDTH=0.0900
MIN_NECK_WIDTH=0.0520
VOLTAGE=0.6V
MAKE_BASE=TRUE

PP0V6_S3_MEM_VREFDQ_A
PP0V6_S3_MEM_VREFCA_A
PP0V6_S3_MEM_VREFDQ_B
PP0V6_S3_MEM_VREFCA_A
MIN_LINE_WIDTH=0.0900
MIN_NECK_WIDTH=0.0520
VOLTAGE=0.6V
MAKE_BASE=TRUE

NotebookSchematics.com
Schematics, Boardviews & Smartphone Service Manuals

PAGE TITLE	Power Aliases - 2
Apple Inc.	DRAWING NUMBER 051-02166
	SIZE D
	REVISION 4.0.0
	BRANCH evt-mars-0
	PAGE 121 OF 150
	SHEET 97 OF 108

NOTICE OF PROPRIETARY PROPERTY:
THE INFORMATION CONTAINED HEREIN IS THE PROPRIETARY PROPERTY OF APPLE INC.
THE POSESSOR AGREES TO THE FOLLOWING:
I TO MAINTAIN THIS DOCUMENT IN CONFIDENCE
II NOT TO REPRODUCE OR COPY IT
III NOT TO REVEAL OR PUBLISH IT IN WHOLE OR PART
IV ALL RIGHTS RESERVED

Unused SoC Signals

38	NC_ALTIMETER_INT	MAKE_BASE=TRUE	NO_TEST=1	NC_ALTIMETER_INT
38	NC_DISP_GCON_INT_L	MAKE_BASE=TRUE	NO_TEST=1	NC_DISP_GCON_INT_L
39	NC_DFR_TOUCH_RSVD	MAKE_BASE=TRUE	NO_TEST=1	NC_DFR_TOUCH_RSVD
38	NC_ENET_LOW_PWR	MAKE_BASE=TRUE	NO_TEST=1	NC_ENET_LOW_PWR
38	NC_ENET_MEDIA_SENSE	MAKE_BASE=TRUE	NO_TEST=1	NC_ENET_MEDIA_SENSE
40	NC_ENET_RESET_L	MAKE_BASE=TRUE	NO_TEST=1	NC_ENET_RESET_L
39	NC_FTCAM_CLK12M_R	MAKE_BASE=TRUE	NO_TEST=1	NC_FTCAM_CLK12M_R
39	NC_FTCAM_RESET_L	MAKE_BASE=TRUE	NO_TEST=1	NC_FTCAM_RESET_L
37	NC_GNSS_DEV_WAKE	MAKE_BASE=TRUE	NO_TEST=1	NC_GNSS_DEV_WAKE
37	NC_GNSS_HOST_TIME	MAKE_BASE=TRUE	NO_TEST=1	NC_GNSS_HOST_TIME
39	NC_I2S_CODEC_MCLK	MAKE_BASE=TRUE	NO_TEST=1	NC_I2S_CODEC_MCLK
39	NC_I2S_CODEC1_MCLK	MAKE_BASE=TRUE	NO_TEST=1	NC_I2S_CODEC1_MCLK
39	NC_I2S_CODEC1_R2D_R	MAKE_BASE=TRUE	NO_TEST=1	NC_I2S_CODEC1_R2D_R
39	NC_I2S_HAWKING_BCLK_R	MAKE_BASE=TRUE	NO_TEST=1	NC_I2S_HAWKING_BCLK_R
39	NC_I2S_HAWKING_D2R	MAKE_BASE=TRUE	NO_TEST=1	NC_I2S_HAWKING_D2R
39	NC_I2S_HAWKING_LRCLK	MAKE_BASE=TRUE	NO_TEST=1	NC_I2S_HAWKING_LRCLK
38	NC_MESA_MENUKEY_L	MAKE_BASE=TRUE	NO_TEST=1	NC_MESA_MENUKEY_L
38	NC_PCC_EVENT	MAKE_BASE=TRUE	NO_TEST=1	NC_PCC_EVENT
15	NC_PCH_ENET_LOW_PWR	MAKE_BASE=TRUE	NO_TEST=1	NC_PCH_ENET_LOW_PWR
38	NC_SOC_PCH_GCON_INT_L	MAKE_BASE=TRUE	NO_TEST=1	NC_SOC_PCH_GCON_INT_L
40	NC_PCIE_CLK100M_ENET_N	MAKE_BASE=TRUE	NO_TEST=1	NC_PCIE_CLK100M_ENET_N
40	NC_PCIE_CLK100M_ENET_P	MAKE_BASE=TRUE	NO_TEST=1	NC_PCIE_CLK100M_ENET_P
40	NC_PCIE_CLK100M_SSD1_01_N	MAKE_BASE=TRUE	NO_TEST=1	NC_PCIE_CLK100M_SSD1_01_N
40	NC_PCIE_CLK100M_SSD1_01_P	MAKE_BASE=TRUE	NO_TEST=1	NC_PCIE_CLK100M_SSD1_01_P
40	NC_PCIE_CLK100M_SSD1_23_N	MAKE_BASE=TRUE	NO_TEST=1	NC_PCIE_CLK100M_SSD1_23_N
40	NC_PCIE_CLK100M_SSD1_23_P	MAKE_BASE=TRUE	NO_TEST=1	NC_PCIE_CLK100M_SSD1_23_P
40	NC_PCIE_CLK100M_WLAN_N	MAKE_BASE=TRUE	NO_TEST=1	NC_PCIE_CLK100M_WLAN_N
40	NC_PCIE_CLK100M_WLAN_P	MAKE_BASE=TRUE	NO_TEST=1	NC_PCIE_CLK100M_WLAN_P
40	NC_PCIE_ENET_D2R_N	MAKE_BASE=TRUE	NO_TEST=1	NC_PCIE_ENET_D2R_N
40	NC_PCIE_ENET_D2R_P	MAKE_BASE=TRUE	NO_TEST=1	NC_PCIE_ENET_D2R_P
40	NC_PCIE_ENET_R2D_C_N	MAKE_BASE=TRUE	NO_TEST=1	NC_PCIE_ENET_R2D_C_N
40	NC_PCIE_ENET_R2D_C_P	MAKE_BASE=TRUE	NO_TEST=1	NC_PCIE_ENET_R2D_C_P
40	NC_PCIE_SSD1_D2R_N<3..0>	MAKE_BASE=TRUE	NO_TEST=1	NC_PCIE_SSD1_D2R_N<3..0>
40	NC_PCIE_SSD1_D2R_P<3..0>	MAKE_BASE=TRUE	NO_TEST=1	NC_PCIE_SSD1_D2R_P<3..0>
40	NC_PCIE_SSD1_R2D_C_N<3..0>	MAKE_BASE=TRUE	NO_TEST=1	NC_PCIE_SSD1_R2D_C_N<3..0>
40	NC_PCIE_SSD1_R2D_C_P<3..0>	MAKE_BASE=TRUE	NO_TEST=1	NC_PCIE_SSD1_R2D_C_P<3..0>
40	NC_PCIE_WLAN_D2R_N	MAKE_BASE=TRUE	NO_TEST=1	NC_PCIE_WLAN_D2R_N
40	NC_PCIE_WLAN_D2R_P	MAKE_BASE=TRUE	NO_TEST=1	NC_PCIE_WLAN_D2R_P
40	NC_PCIE_WLAN_R2D_C_N	MAKE_BASE=TRUE	NO_TEST=1	NC_PCIE_WLAN_R2D_C_N
40	NC_PCIE_WLAN_R2D_C_P	MAKE_BASE=TRUE	NO_TEST=1	NC_PCIE_WLAN_R2D_C_P
38	NC_PCIEDN_WAKE_L	MAKE_BASE=TRUE	NO_TEST=1	NC_PCIEDN_WAKE_L
38	NC_PLCAM_PROX_INT_L	MAKE_BASE=TRUE	NO_TEST=1	NC_PLCAM_PROX_INT_L
38	NC_PLCAM_ROMEO_B2B_DETECT	MAKE_BASE=TRUE	NO_TEST=1	NC_PLCAM_ROMEO_B2B_DETECT
39	NC_PLCAM_RX_CLK12M_R	MAKE_BASE=TRUE	NO_TEST=1	NC_PLCAM_RX_CLK12M_R
39	NC_PLCAM_RX_RESET_L	MAKE_BASE=TRUE	NO_TEST=1	NC_PLCAM_RX_RESET_L
39	NC_PLCAM_TX_CLK12M_R	MAKE_BASE=TRUE	NO_TEST=1	NC_PLCAM_TX_CLK12M_R
39	NC_PLCAM_TX_INT	MAKE_BASE=TRUE	NO_TEST=1	NC_PLCAM_TX_INT
39	NC_PLCAM_TX_RESET_L	MAKE_BASE=TRUE	NO_TEST=1	NC_PLCAM_TX_RESET_L
37	NC_PLCAM_TX_THROTTLE	MAKE_BASE=TRUE	NO_TEST=1	NC_PLCAM_TX_THROTTLE
38	NC_SDCONN_STATE_CHANGE_L	MAKE_BASE=TRUE	NO_TEST=1	NC_SDCONN_STATE_CHANGE_L
38	NC_SMC_GFX_SELF_THROTTLE	MAKE_BASE=TRUE	NO_TEST=1	NC_SMC_GFX_SELF_THROTTLE
38	NC_SMC_LED_ONEWIRE	MAKE_BASE=TRUE	NO_TEST=1	NC_SMC_LED_ONEWIRE
38	NC_SMC_TOPBLK_SWP_L	MAKE_BASE=TRUE	NO_TEST=1	NC_SMC_TOPBLK_SWP_L
38	NC_SPI_ALTIMETER_CS_L	MAKE_BASE=TRUE	NO_TEST=1	NC_SPI_ALTIMETER_CS_L
38	NC_SPI_DESCRIPTOR_OVERRIDE_L	MAKE_BASE=TRUE	NO_TEST=1	NC_SPI_DESCRIPTOR_OVERRIDE_L
40	NC_SSD1_CLK24M_R	MAKE_BASE=TRUE	NO_TEST=1	NC_SSD1_CLK24M_R
40	NC_SSD1_CLKREQ0_L	MAKE_BASE=TRUE	NO_TEST=1	NC_SSD1_CLKREQ0_L
40	NC_SSD1_CLKREQ1_L	MAKE_BASE=TRUE	NO_TEST=1	NC_SSD1_CLKREQ1_L
40	NC_SSD1_CLKREQ2_L	MAKE_BASE=TRUE	NO_TEST=1	NC_SSD1_CLKREQ2_L
40	NC_SSD1_CLKREQ3_L	MAKE_BASE=TRUE	NO_TEST=1	NC_SSD1_CLKREQ3_L
40	NC_SSD1_PCIE_RESET_L	MAKE_BASE=TRUE	NO_TEST=1	NC_SSD1_PCIE_RESET_L
38	NC_SSD1_SWCLK_UART_R2D	MAKE_BASE=TRUE	NO_TEST=1	NC_SSD1_SWCLK_UART_R2D
38	NC_SSD1_SWDIO_UART_D2R	MAKE_BASE=TRUE	NO_TEST=1	NC_SSD1_SWDIO_UART_D2R
39	NC_PCHROM_SW_EN	MAKE_BASE=TRUE	NO_TEST=1	NC_PCHROM_SW_EN
40	NC_PCIE_DN2_R2D_CP	MAKE_BASE=TRUE	NO_TEST=1	NC_PCIE_DN2_R2D_CP
40	NC_PCIE_DN2_R2D_CN	MAKE_BASE=TRUE	NO_TEST=1	NC_PCIE_DN2_R2D_CN
40	NC_PCIE_DN2_D2RP	MAKE_BASE=TRUE	NO_TEST=1	NC_PCIE_DN2_D2RP
40	NC_PCIE_DN2_D2RN	MAKE_BASE=TRUE	NO_TEST=1	NC_PCIE_DN2_D2RN
40	NC_PCIE_DN3_R2D_CP	MAKE_BASE=TRUE	NO_TEST=1	NC_PCIE_DN3_R2D_CP
40	NC_PCIE_DN3_R2D_CN	MAKE_BASE=TRUE	NO_TEST=1	NC_PCIE_DN3_R2D_CN
40	NC_PCIE_DN3_D2RP	MAKE_BASE=TRUE	NO_TEST=1	NC_PCIE_DN3_D2RP
40	NC_PCIE_DN3_D2RN	MAKE_BASE=TRUE	NO_TEST=1	NC_PCIE_DN3_D2RN
40	NC_PCIE_CLK100M_DN2P	MAKE_BASE=TRUE	NO_TEST=1	NC_PCIE_CLK100M_DN2P
40	NC_PCIE_CLK100M_DN2N	MAKE_BASE=TRUE	NO_TEST=1	NC_PCIE_CLK100M_DN2N
40	NC_PCIEDN2_CLKREQ_L	MAKE_BASE=TRUE	NO_TEST=1	NC_PCIEDN2_CLKREQ_L
40	NC_PCIEDN2_RESET_L	MAKE_BASE=TRUE	NO_TEST=1	NC_PCIEDN2_RESET_L
40	NC_PCIE_CLK100M_DN3P	MAKE_BASE=TRUE	NO_TEST=1	NC_PCIE_CLK100M_DN3P
40	NC_PCIE_CLK100M_DN3N	MAKE_BASE=TRUE	NO_TEST=1	NC_PCIE_CLK100M_DN3N
40	NC_PCIEDN3_CLKREQ_L	MAKE_BASE=TRUE	NO_TEST=1	NC_PCIEDN3_CLKREQ_L
40	NC_PCIEDN3_RESET_L	MAKE_BASE=TRUE	NO_TEST=1	NC_PCIEDN3_RESET_L
37	NC_SOC_USB_ID	MAKE_BASE=TRUE	NO_TEST=1	NC_SOC_USB_ID
41	NC_SOC_VDDSOC_SENSE	MAKE_BASE=TRUE	NO_TEST=1	NC_SOC_VDDSOC_SENSE
41	NC_SOC_VSSCPU_SENSE	MAKE_BASE=TRUE	NO_TEST=1	NC_SOC_VSSCPU_SENSE
41	NC_SOC_VSSSOC_SENSE	MAKE_BASE=TRUE	NO_TEST=1	NC_SOC_VSSSOC_SENSE
38	NC_TPAD_VIBE_L	MAKE_BASE=TRUE	NO_TEST=1	NC_TPAD_VIBE_L
39	NC_UART_GNSS_D2R_CTS_L	MAKE_BASE=TRUE	NO_TEST=1	NC_UART_GNSS_D2R_CTS_L
39	NC_UART_GNSS_R2D_RTS_L	MAKE_BASE=TRUE	NO_TEST=1	NC_UART_GNSS_R2D_RTS_L
40	NC_WLAN_CLKREQ_L	MAKE_BASE=TRUE	NO_TEST=1	NC_WLAN_CLKREQ_L
37	NC_WLAN_DEV_WAKE	MAKE_BASE=TRUE	NO_TEST=1	NC_WLAN_DEV_WAKE
40	NC_WLAN_PERST_L	MAKE_BASE=TRUE	NO_TEST=1	NC_WLAN_PERST_L

TP SoC Signals

100 38	TP_SMC_FIXTURE_MODE_L	MAKE_BASE=TRUE		TP_SMC_FIXTURE_MODE_L
103 100 39	TP_SOC_DEBUGPRT_RX	MAKE_BASE=TRUE		TP_SOC_DEBUGPRT_RX
103 100 39	TP_SOC_DEBUGPRT_TX	MAKE_BASE=TRUE		TP_SOC_DEBUGPRT_TX
37	TEST_SOC_AMUXOUT	MAKE_BASE=TRUE		TEST_SOC_AMUXOUT 101
37	TEST_SOC_TST_CLKOUT	MAKE_BASE=TRUE		TEST_SOC_TST_CLKOUT 101

SoC Aliases

39	GND	MAKE_BASE=TRUE
39	GND	MAKE_BASE=TRUE
39	GND	MAKE_BASE=TRUE
39	GND	MAKE_BASE=TRUE
39	GND	MAKE_BASE=TRUE
39	GND	MAKE_BASE=TRUE
39	GND	MAKE_BASE=TRUE
39	GND	MAKE_BASE=TRUE

Unused PMIC Signals

67	NC_CHGR_AUX_OK	MAKE_BASE=TRUE	NO_TEST=1	NC_CHGR_AUX_OK
74	NC_GPU_THRMTRIP	MAKE_BASE=TRUE	NO_TEST=1	NC_GPU_THRMTRIP
74	NC_NAND_DISCHARGE_EN_HDD_PWR_EN	MAKE_BASE=TRUE	NO_TEST=1	NC_NAND_DISCHARGE_EN_HDD_PWR_EN
74	NC_NAND_RESET_L_SD_PWR_EN	MAKE_BASE=TRUE	NO_TEST=1	NC_NAND_RESET_L_SD_PWR_EN
76	NC_NAND_WP_L_ENET_PWR_EN	MAKE_BASE=TRUE	NO_TEST=1	NC_NAND_WP_L_ENET_PWR_EN
76	NC_PEARL_PWREN_P2V7NAND_EN	MAKE_BASE=TRUE	NO_TEST=1	NC_PEARL_PWREN_P2V7NAND_EN
76	NC_PMU_CLK32K_GNSS_R	MAKE_BASE=TRUE	NO_TEST=1	NC_PMU_CLK32K_GNSS_R
76	NC_P3V3G3W_EN	MAKE_BASE=TRUE	NO_TEST=1	NC_P3V3G3W_EN
76	NC_P3V3G3W_PGOOD	MAKE_BASE=TRUE	NO_TEST=1	NC_P3V3G3W_PGOOD
76	NC_PMU_CLK32K	MAKE_BASE=TRUE	NO_TEST=1	NC_PMU_CLK32K
74	NC_PPBUCK8_SW1	MAKE_BASE=TRUE	NO_TEST=1	NC_PPBUCK8_SW1

PMIC Aliases

74	PVCCEOPIO_EDRAM_PGOOD	MAKE_BASE=TRUE		PVCCEOPIO_EDRAM_PGOOD 73
74	GND	MAKE_BASE=TRUE		
76	GND	MAKE_BASE=TRUE		

Unused WIRELESS Signals

35	NC_I2S_BT_D2R	MAKE_BASE=TRUE	NO_TEST=1	NC_I2S_BT_D2R
35	NC_I2S_BT_R2D	MAKE_BASE=TRUE	NO_TEST=1	NC_I2S_BT_R2D
37	NC_WLAN_PMU_TEST	MAKE_BASE=TRUE	NO_TEST=1	NC_WLAN_PMU_TEST

Unused SSD Signals

85	NC_SSD0_OCARINA_VEN2	MAKE_BASE=TRUE	NO_TEST=1	NC_SSD0_OCARINA_VEN2
85	NC_SSD0_OCARINA_VR2_DIS	MAKE_BASE=TRUE	NO_TEST=1	NC_SSD0_OCARINA_VR2_DIS

NotebookSchematics.com
Schematics, Boardviews & Smartphone Service Manuals

SYNC_MASTER=J132_GAREN SYNC_DATE=04/12/2017

PAGE TITLE
Signal Aliases

Apple Inc.

DRAWING NUMBER 051-02166 SIZE D
REVISION 4.0.0
BRANCH evt-mars-0
PAGE 122 OF 150
SHEET 98 OF 108

NOTICE OF PROPRIETARY PROPERTY:
THE INFORMATION CONTAINED HEREIN IS THE PROPRIETARY PROPERTY OF APPLE INC.
THE POSESSOR AGREES TO THE FOLLOWING:
I TO MAINTAIN THIS DOCUMENT IN CONFIDENCE
II NOT TO REPRODUCE OR COPY IT
III NOT TO REVEAL OR PUBLISH IT IN WHOLE OR PART
IV ALL RIGHTS RESERVED

Memory Bit & Byte Swizzle

MAKE_BASE=TRUE

MEM_A_DQ<0>	MEM_A_DQ<0>	21	
MEM_A_DQ<1>	MEM_A_DQ<1>	21	
MEM_A_DQ<2>	MEM_A_DQ<2>	21	
MEM_A_DQ<3>	MEM_A_DQ<3>	21	
MEM_A_DQ<4>	MEM_A_DQ<4>	21	
MEM_A_DQ<5>	MEM_A_DQ<5>	21	
MEM_A_DQ<6>	MEM_A_DQ<6>	21	
MEM_A_DQ<7>	MEM_A_DQ<7>	21	
MEM_A_DQ<8>	MEM_A_DQ<8>	21	
MEM_A_DQ<9>	MEM_A_DQ<9>	21	
MEM_A_DQ<10>	MEM_A_DQ<10>	21	
MEM_A_DQ<11>	MEM_A_DQ<11>	21	
MEM_A_DQ<12>	MEM_A_DQ<12>	21	
MEM_A_DQ<13>	MEM_A_DQ<13>	21	
MEM_A_DQ<14>	MEM_A_DQ<14>	21	
MEM_A_DQ<15>	MEM_A_DQ<15>	21	
MEM_A_DQ<16>	MEM_A_DQ<16>	21	
MEM_A_DQ<17>	MEM_A_DQ<17>	21	
MEM_A_DQ<18>	MEM_A_DQ<18>	21	
MEM_A_DQ<19>	MEM_A_DQ<19>	21	
MEM_A_DQ<20>	MEM_A_DQ<20>	21	
MEM_A_DQ<21>	MEM_A_DQ<21>	21	
MEM_A_DQ<22>	MEM_A_DQ<22>	21	
MEM_A_DQ<23>	MEM_A_DQ<23>	21	
MEM_A_DQ<24>	MEM_A_DQ<24>	21	
MEM_A_DQ<25>	MEM_A_DQ<25>	21	
MEM_A_DQ<26>	MEM_A_DQ<26>	21	
MEM_A_DQ<27>	MEM_A_DQ<27>	21	
MEM_A_DQ<28>	MEM_A_DQ<28>	21	
MEM_A_DQ<29>	MEM_A_DQ<29>	21	
MEM_A_DQ<30>	MEM_A_DQ<30>	21	
MEM_A_DQ<31>	MEM_A_DQ<31>	21	
MEM_A_DQ<32>	MEM_A_DQ<32>	22	
MEM_A_DQ<33>	MEM_A_DQ<33>	22	
MEM_A_DQ<34>	MEM_A_DQ<34>	22	
MEM_A_DQ<35>	MEM_A_DQ<35>	22	
MEM_A_DQ<36>	MEM_A_DQ<36>	22	
MEM_A_DQ<37>	MEM_A_DQ<37>	22	
MEM_A_DQ<38>	MEM_A_DQ<38>	22	
MEM_A_DQ<39>	MEM_A_DQ<39>	22	
MEM_A_DQ<40>	MEM_A_DQ<40>	22	
MEM_A_DQ<41>	MEM_A_DQ<41>	22	
MEM_A_DQ<42>	MEM_A_DQ<42>	22	
MEM_A_DQ<43>	MEM_A_DQ<43>	22	
MEM_A_DQ<44>	MEM_A_DQ<44>	22	
MEM_A_DQ<45>	MEM_A_DQ<45>	22	
MEM_A_DQ<46>	MEM_A_DQ<46>	22	
MEM_A_DQ<47>	MEM_A_DQ<47>	22	
MEM_A_DQ<48>	MEM_A_DQ<48>	22	
MEM_A_DQ<49>	MEM_A_DQ<49>	22	
MEM_A_DQ<50>	MEM_A_DQ<50>	22	
MEM_A_DQ<51>	MEM_A_DQ<51>	22	
MEM_A_DQ<52>	MEM_A_DQ<52>	22	
MEM_A_DQ<53>	MEM_A_DQ<53>	22	
MEM_A_DQ<54>	MEM_A_DQ<54>	22	
MEM_A_DQ<55>	MEM_A_DQ<55>	22	
MEM_A_DQ<56>	MEM_A_DQ<56>	22	
MEM_A_DQ<57>	MEM_A_DQ<57>	22	
MEM_A_DQ<58>	MEM_A_DQ<58>	22	
MEM_A_DQ<59>	MEM_A_DQ<59>	22	
MEM_A_DQ<60>	MEM_A_DQ<60>	22	
MEM_A_DQ<61>	MEM_A_DQ<61>	22	
MEM_A_DQ<62>	MEM_A_DQ<62>	22	
MEM_A_DQ<63>	MEM_A_DQ<63>	22	

MAKE_BASE=TRUE

MEM_B_DQ<0>	MEM_B_DQ<0>	23	
MEM_B_DQ<1>	MEM_B_DQ<1>	23	
MEM_B_DQ<2>	MEM_B_DQ<2>	23	
MEM_B_DQ<3>	MEM_B_DQ<3>	23	
MEM_B_DQ<4>	MEM_B_DQ<4>	23	
MEM_B_DQ<5>	MEM_B_DQ<5>	23	
MEM_B_DQ<6>	MEM_B_DQ<6>	23	
MEM_B_DQ<7>	MEM_B_DQ<7>	23	
MEM_B_DQ<8>	MEM_B_DQ<8>	23	
MEM_B_DQ<9>	MEM_B_DQ<9>	23	
MEM_B_DQ<10>	MEM_B_DQ<10>	23	
MEM_B_DQ<11>	MEM_B_DQ<11>	23	
MEM_B_DQ<12>	MEM_B_DQ<12>	23	
MEM_B_DQ<13>	MEM_B_DQ<13>	23	
MEM_B_DQ<14>	MEM_B_DQ<14>	23	
MEM_B_DQ<15>	MEM_B_DQ<15>	23	
MEM_B_DQ<16>	MEM_B_DQ<16>	23	
MEM_B_DQ<17>	MEM_B_DQ<17>	23	
MEM_B_DQ<18>	MEM_B_DQ<18>	23	
MEM_B_DQ<19>	MEM_B_DQ<19>	23	
MEM_B_DQ<20>	MEM_B_DQ<20>	23	
MEM_B_DQ<21>	MEM_B_DQ<21>	23	
MEM_B_DQ<22>	MEM_B_DQ<22>	23	
MEM_B_DQ<23>	MEM_B_DQ<23>	23	
MEM_B_DQ<24>	MEM_B_DQ<24>	23	
MEM_B_DQ<25>	MEM_B_DQ<25>	23	
MEM_B_DQ<26>	MEM_B_DQ<26>	23	
MEM_B_DQ<27>	MEM_B_DQ<27>	23	
MEM_B_DQ<28>	MEM_B_DQ<28>	23	
MEM_B_DQ<29>	MEM_B_DQ<29>	23	
MEM_B_DQ<30>	MEM_B_DQ<30>	23	
MEM_B_DQ<31>	MEM_B_DQ<31>	23	
MEM_B_DQ<32>	MEM_B_DQ<32>	24	
MEM_B_DQ<33>	MEM_B_DQ<33>	24	
MEM_B_DQ<34>	MEM_B_DQ<34>	24	
MEM_B_DQ<35>	MEM_B_DQ<35>	24	
MEM_B_DQ<36>	MEM_B_DQ<36>	24	
MEM_B_DQ<37>	MEM_B_DQ<37>	24	
MEM_B_DQ<38>	MEM_B_DQ<38>	24	
MEM_B_DQ<39>	MEM_B_DQ<39>	24	
MEM_B_DQ<40>	MEM_B_DQ<40>	24	
MEM_B_DQ<41>	MEM_B_DQ<41>	24	
MEM_B_DQ<42>	MEM_B_DQ<42>	24	
MEM_B_DQ<43>	MEM_B_DQ<43>	24	
MEM_B_DQ<44>	MEM_B_DQ<44>	24	
MEM_B_DQ<45>	MEM_B_DQ<45>	24	
MEM_B_DQ<46>	MEM_B_DQ<46>	24	
MEM_B_DQ<47>	MEM_B_DQ<47>	24	
MEM_B_DQ<48>	MEM_B_DQ<48>	24	
MEM_B_DQ<49>	MEM_B_DQ<49>	24	
MEM_B_DQ<50>	MEM_B_DQ<50>	24	
MEM_B_DQ<51>	MEM_B_DQ<51>	24	
MEM_B_DQ<52>	MEM_B_DQ<52>	24	
MEM_B_DQ<53>	MEM_B_DQ<53>	24	
MEM_B_DQ<54>	MEM_B_DQ<54>	24	
MEM_B_DQ<55>	MEM_B_DQ<55>	24	
MEM_B_DQ<56>	MEM_B_DQ<56>	24	
MEM_B_DQ<57>	MEM_B_DQ<57>	24	
MEM_B_DQ<58>	MEM_B_DQ<58>	24	
MEM_B_DQ<59>	MEM_B_DQ<59>	24	
MEM_B_DQ<60>	MEM_B_DQ<60>	24	
MEM_B_DQ<61>	MEM_B_DQ<61>	24	
MEM_B_DQ<62>	MEM_B_DQ<62>	24	
MEM_B_DQ<63>	MEM_B_DQ<63>	24	

MAKE_BASE=TRUE

MEM_A_DQS_P<0>	MEM_A_DQS_P<0>	21	
MEM_A_DQS_N<0>	MEM_A_DQS_N<0>	21	
MEM_A_DQS_P<1>	MEM_A_DQS_P<1>	21	
MEM_A_DQS_N<1>	MEM_A_DQS_N<1>	21	
MEM_A_DQS_P<2>	MEM_A_DQS_P<2>	21	
MEM_A_DQS_N<2>	MEM_A_DQS_N<2>	21	
MEM_A_DQS_P<3>	MEM_A_DQS_P<3>	21	
MEM_A_DQS_N<3>	MEM_A_DQS_N<3>	21	
MEM_A_DQS_P<4>	MEM_A_DQS_P<4>	22	
MEM_A_DQS_N<4>	MEM_A_DQS_N<4>	22	
MEM_A_DQS_P<5>	MEM_A_DQS_P<5>	22	
MEM_A_DQS_N<5>	MEM_A_DQS_N<5>	22	
MEM_A_DQS_P<6>	MEM_A_DQS_P<6>	22	
MEM_A_DQS_N<6>	MEM_A_DQS_N<6>	22	
MEM_A_DQS_P<7>	MEM_A_DQS_P<7>	22	
MEM_A_DQS_N<7>	MEM_A_DQS_N<7>	22	

MAKE_BASE=TRUE

MEM_B_DQS_P<0>	MEM_B_DQS_P<0>	23	
MEM_B_DQS_N<0>	MEM_B_DQS_N<0>	23	
MEM_B_DQS_P<1>	MEM_B_DQS_P<1>	23	
MEM_B_DQS_N<1>	MEM_B_DQS_N<1>	23	
MEM_B_DQS_P<2>	MEM_B_DQS_P<2>	23	
MEM_B_DQS_N<2>	MEM_B_DQS_N<2>	23	
MEM_B_DQS_P<3>	MEM_B_DQS_P<3>	23	
MEM_B_DQS_N<3>	MEM_B_DQS_N<3>	23	
MEM_B_DQS_P<4>	MEM_B_DQS_P<4>	24	
MEM_B_DQS_N<4>	MEM_B_DQS_N<4>	24	
MEM_B_DQS_P<5>	MEM_B_DQS_P<5>	24	
MEM_B_DQS_N<5>	MEM_B_DQS_N<5>	24	
MEM_B_DQS_P<6>	MEM_B_DQS_P<6>	24	
MEM_B_DQS_N<6>	MEM_B_DQS_N<6>	24	
MEM_B_DQS_P<7>	MEM_B_DQS_P<7>	24	
MEM_B_DQS_N<7>	MEM_B_DQS_N<7>	24	

NotebookSchematic.com
Schematics, Boardviews & Smartphone Service Manuals

SYNC_MASTER=AHARTMAN_J52 SYNC_DATE=10/29/2013

PAGE TITLE
LPDDR3 Bit & Byte Swizzle

Apple Inc.

DRAWING NUMBER 051-02166 SIZE D
REVISION 4.0.0
BRANCH evt-mars-0
PAGE 123 OF 150
SHEET 99 OF 108

NOTICE OF PROPRIETARY PROPERTY:
THE INFORMATION CONTAINED HEREIN IS THE PROPRIETARY PROPERTY OF APPLE INC.
THE POSESSOR AGREES TO THE FOLLOWING:
I TO MAINTAIN THIS DOCUMENT IN CONFIDENCE
II NOT TO REPRODUCE OR COPY IT
III NOT TO REVEAL OR PUBLISH IT IN WHOLE OR PART
IV ALL RIGHTS RESERVED

Functional Test Points

J5110 - DFR Display Connector

100 49	IN	DFR_DISP_VSYNC	FUNC_TEST=TRUE
49 39	IN	DFR_DISP_TE	FUNC_TEST=TRUE
49 37	IN	DFR_DISP_INT	FUNC_TEST=TRUE
49 39	IN	DFR_DISP_RESET_L	FUNC_TEST=TRUE
49	IN	PP3V3_G3HSW_DFR	FUNC_TEST=TRUE (3 TPs)
101 49	IN	MIPI_DFR_CLK_FILT_CONN_P	FUNC_TEST=TRUE
101 49	IN	MIPI_DFR_CLK_FILT_CONN_N	FUNC_TEST=TRUE
101 49	IN	MIPI_DFR_DATA_FILT_CONN_P	FUNC_TEST=TRUE
101 49	IN	MIPI_DFR_DATA_FILT_CONN_N	FUNC_TEST=TRUE
102 100 51 49	IN	PP1V8_DFR	FUNC_TEST=TRUE (2 TPs)
51 49	IN	I2C_DFR_SCL_R	FUNC_TEST=TRUE
51 49	IN	I2C_DFR_SDA_R	FUNC_TEST=TRUE
		GND	FUNC_TEST=TRUE (7 TPs)

J5100 - DFR Touch Connector

49	IN	DFR_TOUCH_LID_OPEN_L	FUNC_TEST=TRUE
49 39	IN	SPI_DFR_CS_L	FUNC_TEST=TRUE
49 46	IN	SPI_DFR_MOSI	FUNC_TEST=TRUE
51 49	IN	I2C_DFR_SCL_R	FUNC_TEST=TRUE
51 49	IN	I2C_DFR_SDA_R	FUNC_TEST=TRUE
49 39	IN	DFR_TOUCH_RESET_L	FUNC_TEST=TRUE
102 100 51 49	IN	PP1V8_DFR	FUNC_TEST=TRUE (2 TPs)
49	IN	PP5V_G3S_DFR_FILT	FUNC_TEST=TRUE (1 TPs)
100 49	IN	DFR_DISP_VSYNC	FUNC_TEST=TRUE
49 46	IN	SPI_DFR_MISO_R	FUNC_TEST=TRUE
49 46	IN	SPI_DFR_CLK	FUNC_TEST=TRUE
49 46	IN	DFR_TOUCH_INT_L	FUNC_TEST=TRUE
49 39	IN	DFR_TOUCH_CLK32K_RESET_L	FUNC_TEST=TRUE
49	IN	TP_DFR_TOUCH_GPIO2	FUNC_TEST=TRUE
100 49	IN	TP_DFR_TOUCH_PANEL_DETECT	FUNC_TEST=TRUE
100 49	IN	TP_DFR_TOUCH_PANEL_DETECT	FUNC_TEST=TRUE
		GND	FUNC_TEST=TRUE (6 TPs)

J6700 - Keyboard Connector

64	IN	PP5V_G3S_FAN_CONN	FUNC_TEST=TRUE
64	IN	GND_FAN	FUNC_TEST=TRUE
64 58	IN	FAN_LT_TACH	FUNC_TEST=TRUE
64 58	IN	FAN_LT_PWM	FUNC_TEST=TRUE
64 58	IN	FAN_RT_TACH	FUNC_TEST=TRUE
64 58	IN	FAN_RT_PWM	FUNC_TEST=TRUE
97 64	IN	PP5V_G3S_KBD	FUNC_TEST=TRUE (3 TPs)
97 64	IN	PP3V3_G3H_RTC	FUNC_TEST=TRUE (1 TPs)
100 64	IN	KBD_BLC_GSSOUT	FUNC_TEST=TRUE
100 64	IN	KBD_BLC_GSLAT	FUNC_TEST=TRUE
97 64	IN	PP3V3_G3S_KBD	FUNC_TEST=TRUE (1 TPs)
100 64	IN	KBD_BLC_GSSIN	FUNC_TEST=TRUE
100 64	IN	KBD_BLC_XBLANK	FUNC_TEST=TRUE
100 64	IN	I2C_KBD_SDA	FUNC_TEST=TRUE
100 64	IN	KBD_INT_L	FUNC_TEST=TRUE
100 64	IN	I2C_KBD_SCL	FUNC_TEST=TRUE
76 66 64 103	IN	PMU_RSLOC_RST_L	FUNC_TEST=TRUE
100 64	IN	KBD_BLC_GSSCK	FUNC_TEST=TRUE
		GND	FUNC_TEST=TRUE (6 TPs)

J6701 - Trackpad Connector

100 64	IN	I2C_KBD_SCL	FUNC_TEST=TRUE
100 64	IN	I2C_KBD_SDA	FUNC_TEST=TRUE
100 64	IN	KBD_INT_L	FUNC_TEST=TRUE
65 64	IN	I2C_TPAD_3V3_SDA	FUNC_TEST=TRUE
65 64	IN	I2C_TPAD_3V3_SCL	FUNC_TEST=TRUE
97 64	IN	PP3V3_G3S_TPAD	FUNC_TEST=TRUE
64	IN	PP5V_G3S_TPAD_CONN	FUNC_TEST=TRUE
64	IN	ACT_GND	FUNC_TEST=TRUE
64	IN	PPVIN_S4_TPAD_FUSE	FUNC_TEST=TRUE
65 64	IN	SPI_TPAD_3V3_CLK	FUNC_TEST=TRUE
65 64	IN	TPAD_3V3_SPI_EN	FUNC_TEST=TRUE
65 64	IN	SPI_TPAD_3V3_MISO	FUNC_TEST=TRUE
65 64	IN	SPI_TPAD_3V3_CS_L	FUNC_TEST=TRUE
65 64	IN	SPI_TPAD_3V3_MOSI	FUNC_TEST=TRUE
65 64	IN	TPAD_3V3_SPI_INT_L	FUNC_TEST=TRUE
65 64	IN	TPAD_3V3_ACTUATOR_DISABLE_L	FUNC_TEST=TRUE
65 64 46	IN	TPAD_KBD_WAKE_L	FUNC_TEST=TRUE
64 49 46 100	IN	IPD_LID_OPEN	FUNC_TEST=TRUE
100 64	IN	KBD_BLC_GSLAT	FUNC_TEST=TRUE
100 64	IN	KBD_BLC_GSSCK	FUNC_TEST=TRUE
100 64	IN	KBD_BLC_GSSOUT	FUNC_TEST=TRUE
100 64	IN	KBD_BLC_GSSIN	FUNC_TEST=TRUE
100 64	IN	KBD_BLC_XBLANK	FUNC_TEST=TRUE
		GND	FUNC_TEST=TRUE (6 TPs)

J4900 - Mesa Connector

47	IN	PP3V0_MESA_FILT_CONN	FUNC_TEST=TRUE (2 TPs)
	IN	SPI_MESA_MISO_CONN	FUNC_TEST=TRUE
47	IN	MESA_INT_CONN	FUNC_TEST=TRUE
47	IN	MESA_BOOST_EN_CONN	FUNC_TEST=TRUE
47	IN	ESD_GND	FUNC_TEST=TRUE (1 TPs)
47	IN	PP1V8_MESA_FILT_CONN	FUNC_TEST=TRUE (1 TPs)
47	IN	SPI_MESA_MOSI_CONN	FUNC_TEST=TRUE
100 47	IN	PMU_ONOFF_R_L_CONN	FUNC_TEST=TRUE
47	IN	SPI_MESA_CLK_CONN	FUNC_TEST=TRUE
47	IN	PP16V0_MESA_FILT_CONN	FUNC_TEST=TRUE
		GND	FUNC_TEST=TRUE (2 TPs)

J6640 - MIC Connector

63 46	IN	PDM_DMIC_CLK0	FUNC_TEST=TRUE
63	IN	AUD_DMIC0_DATA_CONN	FUNC_TEST=TRUE
	IN	PP1V8_DMIC	FUNC_TEST=TRUE (1 TPs)
63 46	IN	PDM_DMIC_CLK1	FUNC_TEST=TRUE
63	IN	AUD_DMIC1_DATA_CONN	FUNC_TEST=TRUE
		GND	FUNC_TEST=TRUE (2 TPs)

J6400 - Left Tweeter Connector

61	IN	SPKRCONN_LT_OUTP	FUNC_TEST=TRUE
61	IN	SPKRCONN_LT_OUTN	FUNC_TEST=TRUE
61 39	IN	SPKR_ID0	FUNC_TEST=TRUE
		GND	FUNC_TEST=TRUE (2 TPs)

J6450 - Left Woofer Connector

61	IN	SPKRCONN_LW_OUTP	FUNC_TEST=TRUE
61	IN	SPKRCONN_LW_OUTN	FUNC_TEST=TRUE
		GND	FUNC_TEST=TRUE (2 TPs)

J6500 - Right Tweeter Connector

62	IN	SPKRCONN_RT_OUTP	FUNC_TEST=TRUE (8 TPs)
62	IN	SPKRCONN_RT_OUTN	FUNC_TEST=TRUE (8 TPs)
62 39	IN	SPKR_ID1	FUNC_TEST=TRUE
		GND	FUNC_TEST=TRUE (2 TPs)

J6550 - Right Woofer Connector

62	IN	SPKRCONN_RW_OUTP	FUNC_TEST=TRUE (1 TPs)
62	IN	SPKRCONN_RW_OUTN	FUNC_TEST=TRUE (1 TPs)
		GND	FUNC_TEST=TRUE (2 TPs)

J6600 - Audio Jack Connector

63	IN	AUD_CONN_HP_LEFT	FUNC_TEST=TRUE (4 TPs)
63	IN	AUD_CONN_HP_RIGHT	FUNC_TEST=TRUE (4 TPs)
63	IN	AUD_CONN_RING2	FUNC_TEST=TRUE
	IN	AUD_CONN_SLEEVE	FUNC_TEST=TRUE
63	IN	AUD_CONN_HP_SENSE_L	FUNC_TEST=TRUE
63	IN	AUD_CONN_HP_SENSE_R	FUNC_TEST=TRUE
63	IN	AUD_CONN_TIP_SENSE	FUNC_TEST=TRUE (2 TPs)
63	IN	AUD_CONN_RING_SENSE	FUNC_TEST=TRUE (1 TPs)
63	IN	AUD_CONN_SLEEVE_XW	FUNC_TEST=TRUE (1 TPs)
63	IN	AUD_CONN_RING2_XW	FUNC_TEST=TRUE (8 TPs)
		GND	FUNC_TEST=TRUE (8 TPs) (4 TPs)

J6950 - Battery Connector

100 67 66	IN	PPVBAT_G3H_CONN	FUNC_TEST=TRUE (8 TPs)
		GND	FUNC_TEST=TRUE (8 TPs)

J6951 - Battery Sense Connector

100 66	IN	SYS_DETECT_L	FUNC_TEST=TRUE
66	IN	SMBUS_3V3_BATT_SCL	FUNC_TEST=TRUE
66	IN	SMBUS_3V3_BATT_SDA	FUNC_TEST=TRUE
66 54	IN	BMON_IOUT	FUNC_TEST=TRUE
78 76 53 52	IN	SENSOR_PWR_EN	FUNC_TEST=TRUE
		GND	FUNC_TEST=TRUE (1 TPs)

J8500 - eDP Connector

100 80 79	IN	PPVOUT_S0_LCDBKLT	FUNC_TEST=TRUE
80	IN	I2C_FTCAM_ISOL_SCL	FUNC_TEST=TRUE
80	IN	I2C_FTCAM_ISOL_SDA	FUNC_TEST=TRUE
80 51	IN	I2C_ALS_SCL	FUNC_TEST=TRUE
80 51	IN	I2C_ALS_SDA	FUNC_TEST=TRUE
80 50	IN	I2C_TCON_SCL	FUNC_TEST=TRUE
80 50	IN	I2C_TCON_SDA	FUNC_TEST=TRUE
80 79	IN	I2C_BKLT_SCL	FUNC_TEST=TRUE
80 79	IN	I2C_BKLT_SDA	FUNC_TEST=TRUE
80	IN	BKLT_PWM_MLB2TCON	FUNC_TEST=TRUE
80	IN	TP_LCD_IRQ_L	FUNC_TEST=TRUE
80 46	IN	DP_INT_HPD	FUNC_TEST=TRUE
80	IN	EDP_PANEL_PWR_BUF_EN	FUNC_TEST=TRUE
102 100 80 50	IN	PP3V3_S0SW_LCD	FUNC_TEST=TRUE (7 TPs)
102 100 97 80	IN	PP5V_S0SW_LCD	FUNC_TEST=TRUE (1 TPs)
102 80	IN	PP5V_G3S_ALSCAM_F	FUNC_TEST=TRUE
101 80	IN	MIPI_FTCAM_CLK_ISOL_FILT_CONN_P	FUNC_TEST=TRUE
101 80	IN	MIPI_FTCAM_CLK_ISOL_FILT_CONN_N	FUNC_TEST=TRUE
101 80	IN	MIPI_FTCAM_DATA_ISOL_FILT_CONN_P<0>	FUNC_TEST=TRUE
101 80	IN	MIPI_FTCAM_DATA_ISOL_FILT_CONN_N<0>	FUNC_TEST=TRUE
80	IN	EDP_INT_ML_P<3>	FUNC_TEST=TRUE
80	IN	EDP_INT_ML_N<3>	FUNC_TEST=TRUE
80	IN	EDP_INT_ML_P<2>	FUNC_TEST=TRUE
80	IN	EDP_INT_ML_N<2>	FUNC_TEST=TRUE
80	IN	EDP_INT_ML_P<1>	FUNC_TEST=TRUE
80	IN	EDP_INT_ML_N<1>	FUNC_TEST=TRUE
80	IN	EDP_INT_ML_P<0>	FUNC_TEST=TRUE
80	IN	EDP_INT_ML_N<0>	FUNC_TEST=TRUE
80	IN	EDP_INT_AUX_P	FUNC_TEST=TRUE
80	IN	EDP_INT_AUX_N	FUNC_TEST=TRUE
		GND	FUNC_TEST=TRUE (8 TPs)

J3300 - Left USB-C Connector

100 31 28	IN	PP20V_USBC_XA_VBUS	FUNC_TEST=TRUE (4 TPs)
		GND	FUNC_TEST=TRUE (4 TPs)
	IN	USBC_XA_CC1_CONN	FUNC_TEST=TRUE
32 31	IN	USBC_XA_CC2_CONN	FUNC_TEST=TRUE
31 29	IN	USBC_XA_SBU1	FUNC_TEST=TRUE
31 29	IN	USBC_XA_SBU2	FUNC_TEST=TRUE
100 31 28	IN	PP20V_USBC_XB_VBUS	FUNC_TEST=TRUE (4 TPs)
		GND	FUNC_TEST=TRUE (4 TPs)
32 31	IN	USBC_XB_CC1_CONN	FUNC_TEST=TRUE
32 31	IN	USBC_XB_CC2_CONN	FUNC_TEST=TRUE
31	IN	TP_USBC_PP20V_XA	FUNC_TEST=TRUE
31	IN	TP_USBC_PP20V_XB	FUNC_TEST=TRUE

JB500 - Right USB-C Connector

100 93 90	IN	PP20V_USBC_TA_VBUS	FUNC_TEST=TRUE (4 TPs)
		GND	FUNC_TEST=TRUE (4 TPs)
94 93	IN	USBC_TA_CC1_CONN	FUNC_TEST=TRUE
94 93	IN	USBC_TA_CC2_CONN	FUNC_TEST=TRUE
100 93 90	IN	PP20V_USBC_TB_VBUS	FUNC_TEST=TRUE (4 TPs)
		GND	FUNC_TEST=TRUE (4 TPs)
94 93	IN	USBC_TB_CC1_CONN	FUNC_TEST=TRUE
94 93	IN	USBC_TB_CC2_CONN	FUNC_TEST=TRUE
93	IN	TP_USBC_PP20V_TB	FUNC_TEST=TRUE
93	IN	TP_USBC_PP20V_TA	FUNC_TEST=TRUE

Probe Block Grid - DFU/SOC

15	IN	TP_USB_FIXT1_N	FUNC_TEST=TRUE
15	IN	TP_USB_FIXT1_P	FUNC_TEST=TRUE
15	IN	TP_USB_FIXT2_N	FUNC_TEST=TRUE
15	IN	TP_USB_FIXT2_P	FUNC_TEST=TRUE
15	IN	TP_USB3_EXTC_D2R_N	FUNC_TEST=TRUE
15	IN	TP_USB3_EXTC_D2R_P	FUNC_TEST=TRUE
15	IN	TP_USB3_EXTC_R2D_C_N	FUNC_TEST=TRUE
15	IN	TP_USB3_EXTC_R2D_C_P	FUNC_TEST=TRUE
		GND	FUNC_TEST=TRUE (3 TPs; 1x for USB2 pair, 1x for USB3 R2D, 1x for USB3 D2R)
100 97 67	IN	PPDCIN_G3H	FUNC_TEST=TRUE (6 TPs)
		GND	FUNC_TEST=TRUE (6 TPs)

DFU/SOC/FCT DEBUG

103 37 28	IN	SOC_USB_VBUS	FUNC_TEST=TRUE
103 76 37 28	IN	SOC_FORCE_DFU	FUNC_TEST=TRUE
103 37 28	IN	SOC_DFU_STATUS	FUNC_TEST=TRUE
38 30 29	IN	SOC_DOCK_CONNECT	FUNC_TEST=TRUE
103	IN	DFUMUX_SEL	FUNC_TEST=TRUE
103 28	IN	USB_SOC_TYPEC_P	FUNC_TEST=TRUE
103 28	IN	USB_SOC_TYPEC_N	FUNC_TEST=TRUE
103 28 12	IN	PCH_UART_DEBUG_R2D	FUNC_TEST=TRUE
103 28 12	IN	PCH_UART_DEBUG_D2R	FUNC_TEST=TRUE
103 38 19	IN	SWD_SOC_SWCLK	FUNC_TEST=TRUE
103 38 19	IN	SWD_SOC_SWDIO	FUNC_TEST=TRUE
103 38	IN	DEBUG_JTAG_SOC_TDI	FUNC_TEST=TRUE
103 38	IN	DEBUG_JTAG_SOC_TDO	FUNC_TEST=TRUE
38	IN	TP_JTAG_SOC_TRST_L	FUNC_TEST=TRUE
103 90 38	IN	SMC_DEBUGPRT_TX	FUNC_TEST=TRUE
103 90 38	IN	SMC_DEBUGPRT_RX	FUNC_TEST=TRUE
	IN	TP_SOC_DEBUGPRT_TX	FUNC_TEST=TRUE
	IN	TP_SOC_DEBUGPRT_RX	FUNC_TEST=TRUE
103 98 39	IN	I2C_PWR_SCL	FUNC_TEST=TRUE
50 38	IN	I2C_PWR_SDA	FUNC_TEST=TRUE
		GND	FUNC_TEST=TRUE (4 TPs)

DFU/SOC/FCT DISCHARGE

100 31 28	IN	PP20V_USBC_XA_VBUS	FUNC_TEST=TRUE
100 31 28	IN	PP20V_USBC_XB_VBUS	FUNC_TEST=TRUE
100 93 90	IN	PP20V_USBC_TA_VBUS	FUNC_TEST=TRUE
100 93 90	IN	PP20V_USBC_TB_VBUS	FUNC_TEST=TRUE
100 97 67	IN	PPDCIN_G3H	FUNC_TEST=TRUE
100 67 66	IN	PPVBAT_G3H_CONN	FUNC_TEST=TRUE
100 97 67	IN	PPBUS_G3H	FUNC_TEST=TRUE
67	IN	PPDCIN_G3H_CHGR	FUNC_TEST=TRUE
67	IN	PPVBAT_G3H_CHGR_REG	FUNC_TEST=TRUE
	IN	SYS_DETECT	FUNC_TEST=TRUE
100 80 79	IN	PPVOUT_S0_LCDBKLT	FUNC_TEST=TRUE

Memory Power

103 77 76	IN	PVDDQ_EN	FUNC_TEST=TRUE
77 76	IN	PVDDQ_PGOOD	FUNC_TEST=TRUE
100 97 77	IN	PP1V2_S3	FUNC_TEST=TRUE
97 8	IN	PP1V2_S3_CPUDDR	FUNC_TEST=TRUE
96 24 23 22 21	IN	PP1V8_S3_MEM	FUNC_TEST=TRUE
100 97 77	IN	PP0V6_S0_DDRVTT	FUNC_TEST=TRUE
		GND	FUNC_TEST=TRUE (6 TPs)

Wireless/BT Power

102 97 36 35	IN	PP3V3_G3S_WLANBT	FUNC_TEST=TRUE
97 36 35 34	IN	PP1V8_G3S_WLANBT_VDDIO	FUNC_TEST=TRUE
		GND	FUNC_TEST=TRUE (2 TPs)

Hall Effect

46	IN	LID_OPEN_LEFT	FUNC_TEST=TRUE
46	IN	LID_OPEN_RIGHT	FUNC_TEST=TRUE
100 64 49 46	IN	IPD_LID_OPEN	FUNC_TEST=TRUE
		GND	FUNC_TEST=TRUE (1 TPs)

DFU/SOC/FCT DMM/Power Sequence

100 97 67	IN	PPDCIN_G3H	FUNC_TEST=TRUE
100 67 66	IN	PPVBAT_G3H_CONN	FUNC_TEST=TRUE
100 97 67	IN	PPBUS_G3H	FUNC_TEST=TRUE
100 66	IN	SYS_DETECT_L	FUNC_TEST=TRUE
97 54 8	IN	PPVCC_S0_CPU	FUNC_TEST=TRUE
97 54 8	IN	PPVCCGT_S0_CPU	FUNC_TEST=TRUE
97 55 8	IN	PPVCCSA_S0_CPU	FUNC_TEST=TRUE
97 8 5	IN	PPVCCIO_S0_CPU	FUNC_TEST=TRUE
97 73	IN	PPVCCEDRAM_S0_CPU	FUNC_TEST=TRUE
96 75	IN	PP1V_S0SW	FUNC_TEST=TRUE
97 78	IN	PP1V2_S0SW	FUNC_TEST=TRUE
96 74	IN	PP1V_S3	FUNC_TEST=TRUE
96 74	IN	PP1V8_S3	FUNC_TEST=TRUE
100 97 77	IN	PP1V2_S3	FUNC_TEST=TRUE
100 97 77	IN	PP0V6_S0_DDRVTT	FUNC_TEST=TRUE
96 74	IN	PP1V_PRIM	FUNC_TEST=TRUE
96 74	IN	PPVPCORE_S5	FUNC_TEST=TRUE
96 75	IN	PP3V3_S5	FUNC_TEST=TRUE
96 74	IN	PP1V8_S5	FUNC_TEST=TRUE
96 14	IN	PP3V_G3H_RTC	FUNC_TEST=TRUE
102 100 80 50	IN	PP3V3_S0SW_LCD	FUNC_TEST=TRUE
102 100 97 80	IN	PP5V_S0SW_LCD	FUNC_TEST=TRUE
76 19	IN	ALL_SYS_PWRGD	FUNC_TEST=TRUE
76 19 15	IN	PCH_RTC_RESET_L	FUNC_TEST=TRUE
45 17 14	IN	PM_SYSRST_L	FUNC_TEST=TRUE
45 34 14	IN	PM_PCH_PWROK	FUNC_TEST=TRUE
45 14	IN	PM_PCH_SYS_PWROK	FUNC_TEST=TRUE
95 45 33 17 14	IN	PM_RSMRST_L	FUNC_TEST=TRUE
103 88 26 16 14 13	IN	PM_SLP_S3_L	FUNC_TEST=TRUE
103 76 38 19	IN	PM_SLP_S0_L	FUNC_TEST=TRUE
45 19 16 14	IN	PLT_RST_L	FUNC_TEST=TRUE
76 45 6	IN	PM_THRMTRIP_L	FUNC_TEST=TRUE
76 17 14	IN	PCH_PWRBTN_L	FUNC_TEST=TRUE
6	IN	CPU_PROCHOT_R_L	FUNC_TEST=TRUE
76 6	IN	CPU_CATERR_L	FUNC_TEST=TRUE
68	IN	CPU_VR_READY	FUNC_TEST=TRUE
103 96 74	IN	PP1V8_SLPS2R	FUNC_TEST=TRUE
103 96 74	IN	PP1V8_AWAKE	FUNC_TEST=TRUE
96 74	IN	PP1V1_SLPS2R	FUNC_TEST=TRUE
96 75	IN	PP0V8_SLPS2R	FUNC_TEST=TRUE
96 74	IN	PP0V82_SLPDDR	FUNC_TEST=TRUE
96 75	IN	PP3V3_AWAKE	FUNC_TEST=TRUE
96 74	IN	PPVDDCPUSRAM_AWAKE	FUNC_TEST=TRUE
96 74	IN	PP0V9_SLPDDR	FUNC_TEST=TRUE
96 75	IN	PP1V1_SLPDDR	FUNC_TEST=TRUE
96 75	IN	PP1V2_AWAKE	FUNC_TEST=TRUE
96 74	IN	PPVDDCPU_AWAKE	FUNC_TEST=TRUE
76 63 38	IN	PMU_COLD_RESET_L	FUNC_TEST=TRUE
85 76 38 37	IN	PMU_SYS_ALIVE	FUNC_TEST=TRUE
103 76 37 29	IN	PMU_ACTIVE_READY	FUNC_TEST=TRUE
67 66	IN	CHGR_EN_MVR	FUNC_TEST=TRUE
97 66	IN	PP3V3_G3H_RTC	FUNC_TEST=TRUE
76 72	IN	PMU_PVDDMAIN_EN	FUNC_TEST=TRUE
97 72	IN	PP3V3_G3H	FUNC_TEST=TRUE
98 38	IN	TP_SMC_FIXTURE_MODE_L	FUNC_TEST=TRUE
76 38	IN	SOC_WDOG	FUNC_TEST=TRUE
103 76 37	IN	SOC_SOCHOT_L	FUNC_TEST=TRUE
90 76 66 28	IN	UPC_PMU_RESET	FUNC_TEST=TRUE
100 47	IN	PMU_ONOFF_R_L_CONN	FUNC_TEST=TRUE
78 76	IN	P3V3G3S_EN	FUNC_TEST=TRUE
97 78	IN	PP3V3_G3S	FUNC_TEST=TRUE
76 72	IN	P5VG3S_EN	FUNC_TEST=TRUE
97 72	IN	PP5V_G3S	FUNC_TEST=TRUE
103 78 76	IN	P1V8G3S_EN	FUNC_TEST=TRUE
97 78	IN	PP1V8_G3S	FUNC_TEST=TRUE
85 46 37	IN	SSD_PMU_RESET_L	FUNC_TEST=TRUE
86 85 84 83 82 81	IN	PP1V8_SSD0	FUNC_TEST=TRUE
85 84 83 82 81	IN	PP0V9_SSD0	FUNC_TEST=TRUE
85 84 83 82 81	IN	PP2V7_NAND_SSD0	FUNC_TEST=TRUE
85 84 83 82 81	IN	SSD0_OCARINA_WP_L	FUNC_TEST=TRUE
85 84 83 82 81	IN	SSD0_OCARINA_PFN	FUNC_TEST=TRUE
85 84 83 82 81	IN	SSD0_OCARINA_RESET_L	FUNC_TEST=TRUE

SYNC_MASTER=J132_CARLOS SYNC_DATE=06/15/2017

PAGE TITLE

ICT FCT 1

Apple Inc.

DRAWING NUMBER	051-02166
SIZE	D
REVISION	4.0.0
BRANCH	evt-mars-0
PAGE	124 OF 150
SHEET	100 OF 108

NOTICE OF PROPRIETARY PROPERTY:
THE INFORMATION CONTAINED HEREIN IS THE PROPRIETARY PROPERTY OF APPLE INC.
THE POSESSOR AGREES TO THE FOLLOWING:
I TO MAINTAIN THIS DOCUMENT IN CONFIDENCE
II NOT TO REPRODUCE OR COPY IT
III NOT TO REVEAL OR PUBLISH IT IN WHOLE OR PART
IV ALL RIGHTS RESERVED

NotebookSchematics.com
Schematics, Boardviews & Smartphone Service Manuals

DP_DDI1_ML_C_N<0>	P2MM SM PP	PP9901
DP_DDI1_ML_C_P<0>	P2MM SM PP	PP9902
DP_DDI2_ML_C_N<0>	P2MM SM PP	PP9903
DP_DDI2_ML_C_P<0>	P2MM SM PP	PP9904
PCIE_SSD0_D2R_N<0>	P2MM SM PP	PP9910
PCIE_SSD0_D2R_P<0>	P2MM SM PP	PP9911
PCIE_TBT_X_D2R_N<0>	P2MM SM PP	PP9919
PCIE_TBT_X_D2R_P<0>	P2MM SM PP	PP9920
PCIE_TBT_T_D2R_N<0>	P2MM SM PP	PP9927
PCIE_TBT_T_D2R_P<0>	P2MM SM PP	PP9928
PCIE_CLK100M_SOC_N	P2MM SM PP	PP9939
PCIE_CLK100M_SOC_P	P2MM SM PP	PP9940
PCIE_CLK100M_SSD0_01_N	P2MM SM PP	PP9941
PCIE_CLK100M_SSD0_01_P	P2MM SM PP	PP9942
PCIE_CLK100M_SSD0_23_N	P2MM SM PP	PP9953
PCIE_CLK100M_SSD0_23_P	P2MM SM PP	PP9954
PCIE_CLK100M_TBT_X_N	P2MM SM PP	PP9943
PCIE_CLK100M_TBT_X_P	P2MM SM PP	PP9944
PCIE_CLK100M_TBT_T_N	P2MM SM PP	PP9945
PCIE_CLK100M_TBT_T_P	P2MM SM PP	PP9946
PCH_PCIE_CLK100M_WLAN_N	P2MM SM PP	PP9947
PCH_PCIE_CLK100M_WLAN_P	P2MM SM PP	PP9948
XDP_USB_EXTA_OC_L	P2MM SM PP	PP9801
XDP_USB_EXTB_OC_L	P2MM SM PP	PP9802
XDP_USB_EXTC_OC_L	P2MM SM PP	PP9803
XDP_USB_EXTD_OC_L	P2MM SM PP	PP9804
XDP_BPM_L<0>	TP9820 A TP-P5	

MIPI_FTCAM_DATA_P<0>	P2MM SM PP	PP9949
MIPI_FTCAM_DATA_N<0>	P2MM SM PP	PP9950
MIPI_FTCAM_CLK_P	P2MM SM PP	PP9951
MIPI_FTCAM_CLK_N	P2MM SM PP	PP9952
MIPI_DFR_DATA_FILT_CONN_P	BI	
MIPI_DFR_DATA_FILT_CONN_N	BI	
MIPI_DFR_CLK_FILT_CONN_P	OUT	
MIPI_DFR_CLK_FILT_CONN_N	OUT	
MIPI_FTCAM_DATA_ISOL_FILT_CONN_P<0>	BI	
MIPI_FTCAM_DATA_ISOL_FILT_CONN_N<0>	BI	
MIPI_FTCAM_CLK_ISOL_FILT_CONN_P	OUT	
MIPI_FTCAM_CLK_ISOL_FILT_CONN_N	OUT	

SAR Fusion Sensor Debug

SPI_ACCEL_CS_L	P2MM SM PP	PP9961
SPI_AOP_SENSOR_CLK	P2MM SM PP	PP9962
SPI_AOP_SENSOR_MOSI	P2MM SM PP	PP9963
SPI_AOP_SENSOR_MISO	P2MM SM PP	PP9964
ACCEL_INT1	P2MM SM PP	PP9965

AUDIO CODEC

I2S_CODEC_BCLK	P2MM SM PP	PP9966
I2S_CODEC_LRCLK_R	P2MM SM PP	PP9967
I2S_CODEC_R2D	P2MM SM PP	PP9968

AUDIO SPKRAMP

I2S_SPKRAMP_R_LRCLK_R	P2MM SM PP	PP9969

SOC SENSE

SOC_VDDCPU_SENSE	P2MM SM PP	PP9930

ACE-TR AUX/LS

USBC_XA_AUXLSX1	P2MM SM PP	PP9970
USBC_XA_AUXLSX2	P2MM SM PP	PP9971
USBC_XB_AUXLSX1	P2MM SM PP	PP9972
USBC_XB_AUXLSX2	P2MM SM PP	PP9973
USBC_TA_AUXLSX1	P2MM SM PP	PP9974
USBC_TA_AUXLSX2	P2MM SM PP	PP9975
USBC_TB_AUXLSX1	P2MM SM PP	PP9976
USBC_TB_AUXLSX2	P2MM SM PP	PP9977

ACE GPIO PPs

UPC_XA_GPIO0	P2MM SM PP	PP9978
UPC_XB_GPIO0	P2MM SM PP	PP9979
UPC_TA_GPIO0	P2MM SM PP	PP9980
UPC_TA_GPIO1	P2MM SM PP	PP9981

SoC PPs

TEST_SOC_AMUXOUT	P2MM SM PP	PP9990
TEST_SOC_TST_CLKOUT	P2MM SM PP	PP9991

WIRELESS PPs

WLAN_CONTEXT_A	P2MM SM PP	PP9994
WLAN_CONTEXT_B	P2MM SM PP	PP9995

PMIC Switch Nodes

PVDDCPUAWAKE_SW0	P2MM SM PP	PP7806
PVDDCPUAWAKE_SW1	P2MM SM PP	PP7807
PVDDCPUAWAKE_SW2	P2MM SM PP	PP7808
PVDDCPUAWAKE_SW3	P2MM SM PP	PP7809
PVDDCPUSRAMAWAKE_SW0	P2MM SM PP	PP7810
P0V8SLPDDR_SW0	P2MM SM PP	PP7811
P0V8SLPDDR_SW1	P2MM SM PP	PP7812
P1V8SLPS2R_SW0	P2MM SM PP	PP7813
P1V1SLPS2R_SW0	P2MM SM PP	PP7814
P1V1SLPS2R_SW1	P2MM SM PP	PP7815
P0V9SLPDDR_SW0	P2MM SM PP	PP7816
P0V9SLPDDR_SW1	P2MM SM PP	PP7817
PVCCPCOREPRIM_SW0	P2MM SM PP	PP7819
PVCCPCOREPRIM_SW1	P2MM SM PP	PP7820
P1VPRIM_SW0	P2MM SM PP	PP7821
P1VPRIM_SW1	P2MM SM PP	PP7822

NotebookSchematics.com
Schematics, Boardviews & Smartphone Service Manuals

SYNC_MASTER=J132_CARLOS SYNC_DATE=06/22/2017

PAGE TITLE

ICT FCT 2

Apple Inc.

DRAWING NUMBER 051-02166 SIZE D

REVISION 4.0.0

BRANCH evt-mars-0

PAGE 125 OF 150

SHEET 101 OF 108

NOTICE OF PROPRIETARY PROPERTY:
THE INFORMATION CONTAINED HEREIN IS THE PROPRIETARY PROPERTY OF APPLE INC.
THE POSESSOR AGREES TO THE FOLLOWING:
I TO MAINTAIN THIS DOCUMENT IN CONFIDENCE
II NOT TO REPRODUCE OR COPY IT
III NOT TO REVEAL OR PUBLISH IT IN WHOLE OR PART
IV ALL RIGHTS RESERVED

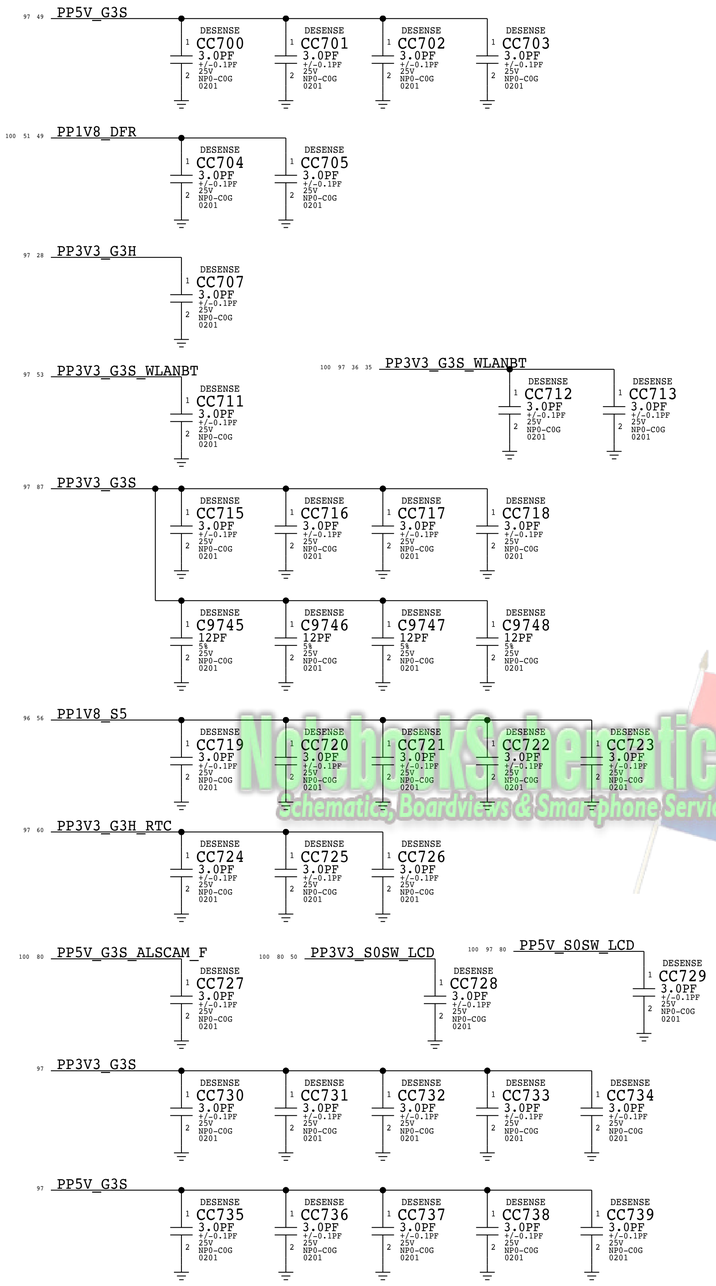

BOM_COST_GROUP=WIRELESS

SYNC MASTER=YHARTANTO J44 SYNC DATE=01/09/2013

PAGE TITLE
Desense Capacitors 1

Apple Inc.

DRAWING NUMBER 051-02166 SIZE D

REVISION 4.0.0

BRANCH evt-mars-0

PAGE 127 OF 150

SHEET 102 OF 108

NOTICE OF PROPRIETARY PROPERTY:
THE INFORMATION CONTAINED HEREIN IS THE PROPRIETARY PROPERTY OF APPLE INC.
THE POSESSOR AGREES TO THE FOLLOWING:
I TO MAINTAIN THIS DOCUMENT IN CONFIDENCE
II NOT TO REPRODUCE OR COPY IT
III NOT TO REVEAL OR PUBLISH IT IN WHOLE OR PART
IV ALL RIGHTS RESERVED

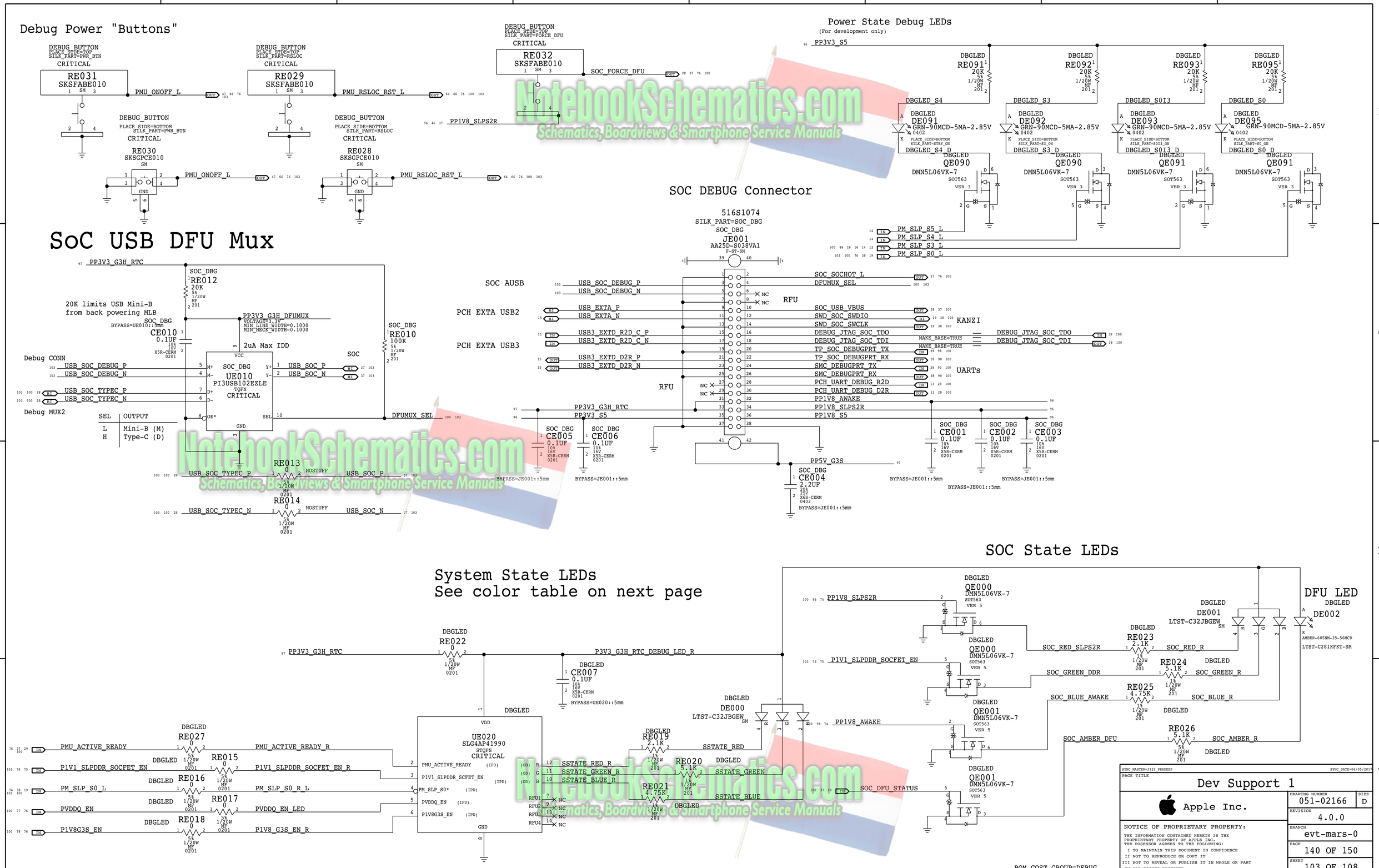
Debug Power "Buttons"
DEBUG_BUTTON
PLACE_SIDE=TOP
SILK_PART=PWR_BTN
CRITICAL
RE031
SKSFABE010
PMU_ONOFF_L
DEBUG_BUTTON
PLACE_SIDE=BOTTOM
SILK_PART=PWR_BTN
CRITICAL
RE030
SKSGPCE010
PMU_ONOFF_L
DEBUG_BUTTON
PLACE_SIDE=TOP
SILK_PART=RSLOC
CRITICAL
RE029
SKSFABE010
PMU_RSLOC_RST_L
DEBUG_BUTTON
PLACE_SIDE=BOTTOM
SILK_PART=RSLOC
CRITICAL
RE028
SKSGPCE010
PMU_RSLOC_RST_L
DEBUG_BUTTON
PLACE_SIDE=TOP
SILK_PART=FORCE_DFU
CRITICAL
RE032
SKSFABE010
SOC_FORCE_DFU
PP1V8_SLPS2R
Power State Debug LEDs
(For development only)
PP3V3_S5
DBGLED RE091 20K
DBGLED RE092 20K
DBGLED RE093 20K
DBGLED RE095 20K
DBGLED_S4
DBGLED_S3
DBGLED_SOI3
DBGLED_S0
DBGLED DE091 GRN-90MCD-5MA-2.85V
DBGLED DE092 GRN-90MCD-5MA-2.85V
DBGLED DE093 GRN-90MCD-5MA-2.85V
DBGLED DE095 GRN-90MCD-5MA-2.85V
DBGLED_S4_D
DBGLED_S3_D
DBGLED_SOI3_D
DBGLED_S0_D
DBGLED QE090 DMN5L06VK-7
DBGLED QE091 DMN5L06VK-7
PM_SLP_S5_L
PM_SLP_S4_L
PM_SLP_S3_L
PM_SLP_S0_L
SoC USB DFU Mux
PP3V3_G3H_RTC
SOC_DBG RE012 20K
20K limits USB Mini-B
from back powering MLB
PP3V3_G3H_DFUMUX
VOLTAGE=3.3V
MIN_LINE_WIDTH=0.1000
MIN_NECK_WIDTH=0.1000
SOC_DBG CE010 0.1UF
2uA Max IDD
SOC_DBG RE010 100K
Debug CONN
USB_SOC_DEBUG_P
USB_SOC_DEBUG_N
USB_SOC_TYPEC_P
USB_SOC_TYPEC_N
SOC_DBG UE010 PI3USB102EZLE
TQFN
CRITICAL
USB_SOC_P
USB_SOC_N
DFUMUX_SEL
Debug MUX2
SEL | OUTPUT
L | Mini-B (M)
H | Type-C (D)
RE013 0 NOSTUFF
RE014 0 NOSTUFF
SOC DEBUG Connector
516S1074
SILK_PART=SOC_DBG
SOC_DBG
JE001
AA25D-S038VA1
F-ST-SM
SOC AUSB
PCH EXTA USB2
PCH EXTA USB3
USB_SOC_DEBUG_P
USB_SOC_DEBUG_N
USB_EXTA_P
USB_EXTA_N
USB3_EXTD_R2D_C_P
USB3_EXTD_R2D_C_N
USB3_EXTD_D2R_P
USB3_EXTD_D2R_N
SOC_SOCHOT_L
DFUMUX_SEL
SOC_USB_VBUS
SWD_SOC_SWDIO
SWD_SOC_SWCLK
DEBUG_JTAG_SOC_TDO
DEBUG_JTAG_SOC_TDI
TP_SOC_DEBUGPRT_TX
TP_SOC_DEBUGPRT_RX
SMC_DEBUGPRT_TX
SMC_DEBUGPRT_RX
PCH_UART_DEBUG_R2D
PCH_UART_DEBUG_D2R
PP1V8_AWAKE
PP1V8_SLPS2R
PP1V8_S5
RFU
KANZI
UARTs
PP3V3_G3H_RTC
PP3V3_S5
PP5V_G3S
SOC_DBG CE005 0.1UF
SOC_DBG CE006 0.1UF
SOC_DBG CE004 2.2UF
SOC_DBG CE001 0.1UF
SOC_DBG CE002 0.1UF
SOC_DBG CE003 0.1UF
BYPASS=JE001::5mm
SOC State LEDs
System State LEDs
See color table on next page
DBGLED RE022 0
P3V3_G3H_RTC_DEBUG_LED_R
DBGLED CE007 0.1UF
BYPASS=UE020::5mm
DBGLED UE020 SLG4AP41990
STQFN
CRITICAL
PMU_ACTIVE_READY
P1V1_SLPDDR_SOCFET_EN
PM_SLP_S0_L
PVDDQ_EN
P1V8G3S_EN
PMU_ACTIVE_READY_R
P1V1_SLPDDR_SOCFET_EN_R
PM_SLP_S0_R_L
PVDDQ_EN_LED
P1V8_G3S_EN_R
DBGLED RE027 0
DBGLED RE015 0
DBGLED RE016 0
DBGLED RE017 0
DBGLED RE018 0
SSTATE_RED_R
SSTATE_GREEN_R
SSTATE_BLUE_R
SSTATE_RED
SSTATE_GREEN
SSTATE_BLUE
DBGLED RE019 2.1K
DBGLED RE020 5.1K
DBGLED RE021 4.75K
DBGLED DE000 LTST-C32JBGEW
PP1V8_SLPS2R
P1V1_SLPDDR_SOCFET_EN
PP1V8_AWAKE
SOC_DFU_STATUS
DBGLED QE000 DMN5L06VK-7
DBGLED QE001 DMN5L06VK-7
SOC_RED_SLPS2R
SOC_GREEN_DDR
SOC_BLUE_AWAKE
SOC_AMBER_DFU
DBGLED RE023 2.1K
DBGLED RE024 5.1K
DBGLED RE025 4.75K
DBGLED RE026 5.1K
SOC_RED_R
SOC_GREEN_R
SOC_BLUE_R
SOC_AMBER_R
DBGLED DE001 LTST-C32JBGEW
DFU LED
DBGLED DE002
AMBER-605NM-35-56MCD
LTST-C281KFKT-SM
BOM_COST_GROUP=DEBUG
Dev Support 1
Apple Inc.
NOTICE OF PROPRIETARY PROPERTY:
THE INFORMATION CONTAINED HEREIN IS THE PROPRIETARY PROPERTY OF APPLE INC.
THE POSESSOR AGREES TO THE FOLLOWING:
I TO MAINTAIN THIS DOCUMENT IN CONFIDENCE
II NOT TO REPRODUCE OR COPY IT
III NOT TO REVEAL OR PUBLISH IT IN WHOLE OR PART
IV ALL RIGHTS RESERVED
DRAWING NUMBER 051-02166
SIZE D
REVISION 4.0.0
BRANCH evt-mars-0
PAGE 140 OF 150
SHEET 103 OF 108

UE020 SAK Truth Table:

INPUTS					OUTPUTS (OD)			
PMU_ACT_RDY	SLP_SCFET_EN	SLP_S0_L	VDDQ_EN	1V8G3S_EN	R	G	B	COLOR
0	0	0	0	0	BLINK	1	1	Blinking Red
0	0	0	0	1	0	1	1	Red
0	0	0	1	0	0	1	0	Magenta
0	0	0	1	1	0	0	0	White
0	0	1	0	0	0	1	0	Magenta
0	0	1	0	1	0	1	0	Magenta
0	0	1	1	0	0	1	0	Magenta
0	0	1	1	1	0	1	0	Magenta
0	1	0	0	0	0	1	0	Magenta
0	1	0	0	1	0	1	0	Magenta
0	1	0	1	0	0	1	0	Magenta
0	1	0	1	1	0	1	0	Magenta
0	1	1	0	0	0	1	0	Magenta
0	1	1	0	1	0	1	0	Magenta
0	1	1	1	0	0	1	0	Magenta
0	1	1	1	1	0	1	0	Magenta
1	0	0	0	0	0	1	0	Magenta
1	0	0	0	1	0	1	0	Magenta
1	0	0	1	0	0	1	0	Magenta
1	0	0	1	1	0	1	0	Magenta
1	0	1	0	0	0	1	0	Magenta
1	0	1	0	1	0	1	0	Magenta
1	0	1	1	0	0	1	0	Magenta
1	0	1	1	1	0	1	0	Magenta
1	1	0	0	0	BLINK	0	1	Blinking Green & Yellow
1	1	0	0	1	0	0	1	Yellow
1	1	0	1	0	0	1	0	Magenta
1	1	0	1	1	1	1	0	Blue
1	1	1	0	0	0	1	0	Magenta
1	1	1	0	1	0	1	0	Magenta
1	1	1	1	0	0	1	0	Magenta
1	1	1	1	1	1	0	1	Green

NotebookSchematics.com
Schematics, Boardviews & Smartphone Service Manuals

SYNC_MASTER=J79_RIO SYNC_DATE=06/18/2015

PAGE TITLE
Dev Support 2

Apple Inc.

DRAWING NUMBER 051-02166 SIZE D
REVISION 4.0.0
BRANCH evt-mars-0
PAGE 141 OF 150
SHEET 104 OF 108

NOTICE OF PROPRIETARY PROPERTY:
THE INFORMATION CONTAINED HEREIN IS THE PROPRIETARY PROPERTY OF APPLE INC.
THE POSESSOR AGREES TO THE FOLLOWING:
I TO MAINTAIN THIS DOCUMENT IN CONFIDENCE
II NOT TO REPRODUCE OR COPY IT
III NOT TO REVEAL OR PUBLISH IT IN WHOLE OR PART
IV ALL RIGHTS RESERVED

BOM Variants

BOM NUMBER	BOM NAME	BOM OPTIONS
685-00187	COMMON PARTS,MLB,X941	X941_COMMON
985-00366	DEV,MLB,X941	X941_DEVEL:ENG
939-05022	PCBA,MLB,NO CPU,SS-8G,SD-256G,X941	BASE_BOM,DEVEL_BOM,ALTERNATE,DRAMCFG:SS_8G,NANDCFG:SD_256G
939-05023	PCBA,MLB,CPU SOCKET,SS-8G,SD-256G,X941	BASE_BOM,DEVEL_BOM,ALTERNATE,CPU:SOCKET,DRAMCFG:SS_8G,NANDCFG:SD_256G
939-05373	PCBA,MLB,2.3G,HY-8G,SS-2T-DOE,X941	BASE_BOM,DEVEL_BOM,ALTERNATE,CPU:2.3G,DRAMCFG:HY_8G,NANDCFG:SS_2T_DOE
939-05374	PCBA,MLB,2.3G,MI-8G,SD-256G-DOE,X941	BASE_BOM,DEVEL_BOM,ALTERNATE,CPU:2.3G,DRAMCFG:MI_8G,NANDCFG:SD_256G_DOE
939-05375	PCBA,MLB,2.3G,SS-8G,TO-256G-DOE,X941	BASE_BOM,DEVEL_BOM,ALTERNATE,CPU:2.3G,DRAMCFG:SS_8G,NANDCFG:TO_256G_DOE
939-05698	PCBA,MLB,NO CPU,RF DOE,X941	SCH,PCB,RF_DOE

BOM NUMBER	BOM NAME	BOM OPTIONS
639-05125	PCBA,MLB,2.3G,HY-8G,SD-256G,X941	BASE_BOM,DEVEL_BOM,ALTERNATE,CPU:2.3G,DRAMCFG:HY_8G,NANDCFG:SD_256G
639-05126	PCBA,MLB,2.3G,HY-8G,TO-256G,X941	BASE_BOM,DEVEL_BOM,ALTERNATE,CPU:2.3G,DRAMCFG:HY_8G,NANDCFG:TO_256G
639-05127	PCBA,MLB,2.3G,MI-8G,SD-256G,X941	BASE_BOM,DEVEL_BOM,ALTERNATE,CPU:2.3G,DRAMCFG:MI_8G,NANDCFG:SD_256G
639-05128	PCBA,MLB,2.3G,MI-8G,TO-256G,X941	BASE_BOM,DEVEL_BOM,ALTERNATE,CPU:2.3G,DRAMCFG:MI_8G,NANDCFG:TO_256G
639-05129	PCBA,MLB,2.3G,SS-8G,SD-256G,X941	BASE_BOM,DEVEL_BOM,ALTERNATE,CPU:2.3G,DRAMCFG:SS_8G,NANDCFG:SD_256G
639-05130	PCBA,MLB,2.3G,SS-8G,TO-256G,X941	BASE_BOM,DEVEL_BOM,ALTERNATE,CPU:2.3G,DRAMCFG:SS_8G,NANDCFG:TO_256G
639-05131	PCBA,MLB,2.3G,HY-16G,SD-256G,X941	BASE_BOM,DEVEL_BOM,ALTERNATE,CPU:2.3G,DRAMCFG:HY_16G,NANDCFG:SD_256G
639-05132	PCBA,MLB,2.3G,HY-16G,TO-256G,X941	BASE_BOM,DEVEL_BOM,ALTERNATE,CPU:2.3G,DRAMCFG:HY_16G,NANDCFG:TO_256G
639-05133	PCBA,MLB,2.3G,MI-16G,SD-256G,X941	BASE_BOM,DEVEL_BOM,ALTERNATE,CPU:2.3G,DRAMCFG:MI_16G,NANDCFG:SD_256G
639-05134	PCBA,MLB,2.3G,MI-16G,TO-256G,X941	BASE_BOM,DEVEL_BOM,ALTERNATE,CPU:2.3G,DRAMCFG:MI_16G,NANDCFG:TO_256G
639-05135	PCBA,MLB,2.3G,SS-16G,SD-256G,X941	BASE_BOM,DEVEL_BOM,ALTERNATE,CPU:2.3G,DRAMCFG:SS_16G,NANDCFG:SD_256G
639-05136	PCBA,MLB,2.3G,SS-16G,TO-256G,X941	BASE_BOM,DEVEL_BOM,ALTERNATE,CPU:2.3G,DRAMCFG:SS_16G,NANDCFG:TO_256G
639-05193	PCBA,MLB,2.3G,HY-8G,SD-512G,X941	BASE_BOM,DEVEL_BOM,ALTERNATE,CPU:2.3G,DRAMCFG:HY_8G,NANDCFG:SD_512G
639-05194	PCBA,MLB,2.3G,HY-8G,TO-512G,X941	BASE_BOM,DEVEL_BOM,ALTERNATE,CPU:2.3G,DRAMCFG:HY_8G,NANDCFG:TO_512G
639-05195	PCBA,MLB,2.3G,MI-8G,SD-512G,X941	BASE_BOM,DEVEL_BOM,ALTERNATE,CPU:2.3G,DRAMCFG:MI_8G,NANDCFG:SD_512G
639-05196	PCBA,MLB,2.3G,MI-8G,TO-512G,X941	BASE_BOM,DEVEL_BOM,ALTERNATE,CPU:2.3G,DRAMCFG:MI_8G,NANDCFG:TO_512G
639-05197	PCBA,MLB,2.3G,SS-8G,SD-512G,X941	BASE_BOM,DEVEL_BOM,ALTERNATE,CPU:2.3G,DRAMCFG:SS_8G,NANDCFG:SD_512G
639-05198	PCBA,MLB,2.3G,SS-8G,TO-512G,X941	BASE_BOM,DEVEL_BOM,ALTERNATE,CPU:2.3G,DRAMCFG:SS_8G,NANDCFG:TO_512G
639-05199	PCBA,MLB,2.3G,HY-16G,SD-512G,X941	BASE_BOM,DEVEL_BOM,ALTERNATE,CPU:2.3G,DRAMCFG:HY_16G,NANDCFG:SD_512G
639-05200	PCBA,MLB,2.3G,HY-16G,TO-512G,X941	BASE_BOM,DEVEL_BOM,ALTERNATE,CPU:2.3G,DRAMCFG:HY_16G,NANDCFG:TO_512G
639-05201	PCBA,MLB,2.3G,MI-16G,SD-512G,X941	BASE_BOM,DEVEL_BOM,ALTERNATE,CPU:2.3G,DRAMCFG:MI_16G,NANDCFG:SD_512G
639-05202	PCBA,MLB,2.3G,MI-16G,TO-512G,X941	BASE_BOM,DEVEL_BOM,ALTERNATE,CPU:2.3G,DRAMCFG:MI_16G,NANDCFG:TO_512G
639-05203	PCBA,MLB,2.3G,SS-16G,SD-512G,X941	BASE_BOM,DEVEL_BOM,ALTERNATE,CPU:2.3G,DRAMCFG:SS_16G,NANDCFG:SD_512G
639-05204	PCBA,MLB,2.3G,SS-16G,TO-512G,X941	BASE_BOM,DEVEL_BOM,ALTERNATE,CPU:2.3G,DRAMCFG:SS_16G,NANDCFG:TO_512G
639-05205	PCBA,MLB,2.3G,HY-8G,SD-1T,X941	BASE_BOM,DEVEL_BOM,ALTERNATE,CPU:2.3G,DRAMCFG:HY_8G,NANDCFG:SD_1T
639-05206	PCBA,MLB,2.3G,HY-8G,SS-1T,X941	BASE_BOM,DEVEL_BOM,ALTERNATE,CPU:2.3G,DRAMCFG:HY_8G,NANDCFG:SS_1T
639-05207	PCBA,MLB,2.3G,HY-8G,TO-1T,X941	BASE_BOM,DEVEL_BOM,ALTERNATE,CPU:2.3G,DRAMCFG:HY_8G,NANDCFG:TO_1T
639-05208	PCBA,MLB,2.3G,MI-8G,SD-1T,X941	BASE_BOM,DEVEL_BOM,ALTERNATE,CPU:2.3G,DRAMCFG:MI_8G,NANDCFG:SD_1T
639-05209	PCBA,MLB,2.3G,MI-8G,SS-1T,X941	BASE_BOM,DEVEL_BOM,ALTERNATE,CPU:2.3G,DRAMCFG:MI_8G,NANDCFG:SS_1T
639-05210	PCBA,MLB,2.3G,MI-8G,TO-1T,X941	BASE_BOM,DEVEL_BOM,ALTERNATE,CPU:2.3G,DRAMCFG:MI_8G,NANDCFG:TO_1T
639-05211	PCBA,MLB,2.3G,SS-8G,SD-1T,X941	BASE_BOM,DEVEL_BOM,ALTERNATE,CPU:2.3G,DRAMCFG:SS_8G,NANDCFG:SD_1T
639-05212	PCBA,MLB,2.3G,SS-8G,SS-1T,X941	BASE_BOM,DEVEL_BOM,ALTERNATE,CPU:2.3G,DRAMCFG:SS_8G,NANDCFG:SS_1T
639-05213	PCBA,MLB,2.3G,SS-8G,TO-1T,X941	BASE_BOM,DEVEL_BOM,ALTERNATE,CPU:2.3G,DRAMCFG:SS_8G,NANDCFG:TO_1T
639-05214	PCBA,MLB,2.3G,HY-16G,SD-1T,X941	BASE_BOM,DEVEL_BOM,ALTERNATE,CPU:2.3G,DRAMCFG:HY_16G,NANDCFG:SD_1T
639-05215	PCBA,MLB,2.3G,HY-16G,SS-1T,X941	BASE_BOM,DEVEL_BOM,ALTERNATE,CPU:2.3G,DRAMCFG:HY_16G,NANDCFG:SS_1T
639-05216	PCBA,MLB,2.3G,HY-16G,TO-1T,X941	BASE_BOM,DEVEL_BOM,ALTERNATE,CPU:2.3G,DRAMCFG:HY_16G,NANDCFG:TO_1T
639-05217	PCBA,MLB,2.3G,MI-16G,SD-1T,X941	BASE_BOM,DEVEL_BOM,ALTERNATE,CPU:2.3G,DRAMCFG:MI_16G,NANDCFG:SD_1T
639-05218	PCBA,MLB,2.3G,MI-16G,SS-1T,X941	BASE_BOM,DEVEL_BOM,ALTERNATE,CPU:2.3G,DRAMCFG:MI_16G,NANDCFG:SS_1T
639-05219	PCBA,MLB,2.3G,MI-16G,TO-1T,X941	BASE_BOM,DEVEL_BOM,ALTERNATE,CPU:2.3G,DRAMCFG:MI_16G,NANDCFG:TO_1T
639-05220	PCBA,MLB,2.3G,SS-16G,SD-1T,X941	BASE_BOM,DEVEL_BOM,ALTERNATE,CPU:2.3G,DRAMCFG:SS_16G,NANDCFG:SD_1T
639-05221	PCBA,MLB,2.3G,SS-16G,SS-1T,X941	BASE_BOM,DEVEL_BOM,ALTERNATE,CPU:2.3G,DRAMCFG:SS_16G,NANDCFG:SS_1T
639-05222	PCBA,MLB,2.3G,SS-16G,TO-1T,X941	BASE_BOM,DEVEL_BOM,ALTERNATE,CPU:2.3G,DRAMCFG:SS_16G,NANDCFG:TO_1T
639-05223	PCBA,MLB,2.3G,HY-8G,SS-2T,X941	BASE_BOM,DEVEL_BOM,ALTERNATE,CPU:2.3G,DRAMCFG:HY_8G,NANDCFG:SS_2T
639-05224	PCBA,MLB,2.3G,MI-8G,SS-2T,X941	BASE_BOM,DEVEL_BOM,ALTERNATE,CPU:2.3G,DRAMCFG:MI_8G,NANDCFG:SS_2T
639-05225	PCBA,MLB,2.3G,SS-8G,SS-2T,X941	BASE_BOM,DEVEL_BOM,ALTERNATE,CPU:2.3G,DRAMCFG:SS_8G,NANDCFG:SS_2T
639-05226	PCBA,MLB,2.3G,HY-16G,SS-2T,X941	BASE_BOM,DEVEL_BOM,ALTERNATE,CPU:2.3G,DRAMCFG:HY_16G,NANDCFG:SS_2T
639-05227	PCBA,MLB,2.3G,MI-16G,SS-2T,X941	BASE_BOM,DEVEL_BOM,ALTERNATE,CPU:2.3G,DRAMCFG:MI_16G,NANDCFG:SS_2T
639-05228	PCBA,MLB,2.3G,SS-16G,SS-2T,X941	BASE_BOM,DEVEL_BOM,ALTERNATE,CPU:2.3G,DRAMCFG:SS_16G,NANDCFG:SS_2T

BOM NUMBER	BOM NAME	BOM OPTIONS
639-05528	PCBA,MLB,2.5G,HY-8G,SD-256G,X941	BASE_BOM,DEVEL_BOM,ALTERNATE,CPU:2.5G,DRAMCFG:HY_8G,NANDCFG:SD_256G
639-05529	PCBA,MLB,2.5G,HY-8G,TO-256G,X941	BASE_BOM,DEVEL_BOM,ALTERNATE,CPU:2.5G,DRAMCFG:HY_8G,NANDCFG:TO_256G
639-05530	PCBA,MLB,2.5G,MI-8G,SD-256G,X941	BASE_BOM,DEVEL_BOM,ALTERNATE,CPU:2.5G,DRAMCFG:MI_8G,NANDCFG:SD_256G
639-05531	PCBA,MLB,2.5G,MI-8G,TO-256G,X941	BASE_BOM,DEVEL_BOM,ALTERNATE,CPU:2.5G,DRAMCFG:MI_8G,NANDCFG:TO_256G
639-05532	PCBA,MLB,2.5G,SS-8G,SD-256G,X941	BASE_BOM,DEVEL_BOM,ALTERNATE,CPU:2.5G,DRAMCFG:SS_8G,NANDCFG:SD_256G
639-05533	PCBA,MLB,2.5G,SS-8G,TO-256G,X941	BASE_BOM,DEVEL_BOM,ALTERNATE,CPU:2.5G,DRAMCFG:SS_8G,NANDCFG:TO_256G
639-05534	PCBA,MLB,2.5G,HY-16G,SD-256G,X941	BASE_BOM,DEVEL_BOM,ALTERNATE,CPU:2.5G,DRAMCFG:HY_16G,NANDCFG:SD_256G
639-05535	PCBA,MLB,2.5G,HY-16G,TO-256G,X941	BASE_BOM,DEVEL_BOM,ALTERNATE,CPU:2.5G,DRAMCFG:HY_16G,NANDCFG:TO_256G
639-05536	PCBA,MLB,2.5G,MI-16G,SD-256G,X941	BASE_BOM,DEVEL_BOM,ALTERNATE,CPU:2.5G,DRAMCFG:MI_16G,NANDCFG:SD_256G
639-05537	PCBA,MLB,2.5G,MI-16G,TO-256G,X941	BASE_BOM,DEVEL_BOM,ALTERNATE,CPU:2.5G,DRAMCFG:MI_16G,NANDCFG:TO_256G
639-05538	PCBA,MLB,2.5G,SS-16G,SD-256G,X941	BASE_BOM,DEVEL_BOM,ALTERNATE,CPU:2.5G,DRAMCFG:SS_16G,NANDCFG:SD_256G
639-05539	PCBA,MLB,2.5G,SS-16G,TO-256G,X941	BASE_BOM,DEVEL_BOM,ALTERNATE,CPU:2.5G,DRAMCFG:SS_16G,NANDCFG:TO_256G
639-05540	PCBA,MLB,2.5G,HY-8G,SD-512G,X941	BASE_BOM,DEVEL_BOM,ALTERNATE,CPU:2.5G,DRAMCFG:HY_8G,NANDCFG:SD_512G
639-05541	PCBA,MLB,2.5G,HY-8G,TO-512G,X941	BASE_BOM,DEVEL_BOM,ALTERNATE,CPU:2.5G,DRAMCFG:HY_8G,NANDCFG:TO_512G
639-05542	PCBA,MLB,2.5G,MI-8G,SD-512G,X941	BASE_BOM,DEVEL_BOM,ALTERNATE,CPU:2.5G,DRAMCFG:MI_8G,NANDCFG:SD_512G
639-05543	PCBA,MLB,2.5G,MI-8G,TO-512G,X941	BASE_BOM,DEVEL_BOM,ALTERNATE,CPU:2.5G,DRAMCFG:MI_8G,NANDCFG:TO_512G
639-05544	PCBA,MLB,2.5G,SS-8G,SD-512G,X941	BASE_BOM,DEVEL_BOM,ALTERNATE,CPU:2.5G,DRAMCFG:SS_8G,NANDCFG:SD_512G
639-05545	PCBA,MLB,2.5G,SS-8G,TO-512G,X941	BASE_BOM,DEVEL_BOM,ALTERNATE,CPU:2.5G,DRAMCFG:SS_8G,NANDCFG:TO_512G
639-05546	PCBA,MLB,2.5G,HY-16G,SD-512G,X941	BASE_BOM,DEVEL_BOM,ALTERNATE,CPU:2.5G,DRAMCFG:HY_16G,NANDCFG:SD_512G
639-05547	PCBA,MLB,2.5G,HY-16G,TO-512G,X941	BASE_BOM,DEVEL_BOM,ALTERNATE,CPU:2.5G,DRAMCFG:HY_16G,NANDCFG:TO_512G
639-05548	PCBA,MLB,2.5G,MI-16G,SD-512G,X941	BASE_BOM,DEVEL_BOM,ALTERNATE,CPU:2.5G,DRAMCFG:MI_16G,NANDCFG:SD_512G
639-05549	PCBA,MLB,2.5G,MI-16G,TO-512G,X941	BASE_BOM,DEVEL_BOM,ALTERNATE,CPU:2.5G,DRAMCFG:MI_16G,NANDCFG:TO_512G
639-05550	PCBA,MLB,2.5G,SS-16G,SD-512G,X941	BASE_BOM,DEVEL_BOM,ALTERNATE,CPU:2.5G,DRAMCFG:SS_16G,NANDCFG:SD_512G
639-05551	PCBA,MLB,2.5G,SS-16G,TO-512G,X941	BASE_BOM,DEVEL_BOM,ALTERNATE,CPU:2.5G,DRAMCFG:SS_16G,NANDCFG:TO_512G
639-05552	PCBA,MLB,2.5G,HY-8G,SD-1T,X941	BASE_BOM,DEVEL_BOM,ALTERNATE,CPU:2.5G,DRAMCFG:HY_8G,NANDCFG:SD_1T
639-05553	PCBA,MLB,2.5G,HY-8G,SS-1T,X941	BASE_BOM,DEVEL_BOM,ALTERNATE,CPU:2.5G,DRAMCFG:HY_8G,NANDCFG:SS_1T
639-05554	PCBA,MLB,2.5G,HY-8G,TO-1T,X941	BASE_BOM,DEVEL_BOM,ALTERNATE,CPU:2.5G,DRAMCFG:HY_8G,NANDCFG:TO_1T
639-05555	PCBA,MLB,2.5G,MI-8G,SD-1T,X941	BASE_BOM,DEVEL_BOM,ALTERNATE,CPU:2.5G,DRAMCFG:MI_8G,NANDCFG:SD_1T
639-05556	PCBA,MLB,2.5G,MI-8G,SS-1T,X941	BASE_BOM,DEVEL_BOM,ALTERNATE,CPU:2.5G,DRAMCFG:MI_8G,NANDCFG:SS_1T
639-05557	PCBA,MLB,2.5G,MI-8G,TO-1T,X941	BASE_BOM,DEVEL_BOM,ALTERNATE,CPU:2.5G,DRAMCFG:MI_8G,NANDCFG:TO_1T
639-05558	PCBA,MLB,2.5G,SS-8G,SD-1T,X941	BASE_BOM,DEVEL_BOM,ALTERNATE,CPU:2.5G,DRAMCFG:SS_8G,NANDCFG:SD_1T
639-05559	PCBA,MLB,2.5G,SS-8G,SS-1T,X941	BASE_BOM,DEVEL_BOM,ALTERNATE,CPU:2.5G,DRAMCFG:SS_8G,NANDCFG:SS_1T
639-05560	PCBA,MLB,2.5G,SS-8G,TO-1T,X941	BASE_BOM,DEVEL_BOM,ALTERNATE,CPU:2.5G,DRAMCFG:SS_8G,NANDCFG:TO_1T
639-05561	PCBA,MLB,2.5G,HY-16G,SD-1T,X941	BASE_BOM,DEVEL_BOM,ALTERNATE,CPU:2.5G,DRAMCFG:HY_16G,NANDCFG:SD_1T
639-05562	PCBA,MLB,2.5G,HY-16G,SS-1T,X941	BASE_BOM,DEVEL_BOM,ALTERNATE,CPU:2.5G,DRAMCFG:HY_16G,NANDCFG:SS_1T
639-05563	PCBA,MLB,2.5G,HY-16G,TO-1T,X941	BASE_BOM,DEVEL_BOM,ALTERNATE,CPU:2.5G,DRAMCFG:HY_16G,NANDCFG:TO_1T
639-05564	PCBA,MLB,2.5G,MI-16G,SD-1T,X941	BASE_BOM,DEVEL_BOM,ALTERNATE,CPU:2.5G,DRAMCFG:MI_16G,NANDCFG:SD_1T
639-05565	PCBA,MLB,2.5G,MI-16G,SS-1T,X941	BASE_BOM,DEVEL_BOM,ALTERNATE,CPU:2.5G,DRAMCFG:MI_16G,NANDCFG:SS_1T
639-05566	PCBA,MLB,2.5G,MI-16G,TO-1T,X941	BASE_BOM,DEVEL_BOM,ALTERNATE,CPU:2.5G,DRAMCFG:MI_16G,NANDCFG:TO_1T
639-05567	PCBA,MLB,2.5G,SS-16G,SD-1T,X941	BASE_BOM,DEVEL_BOM,ALTERNATE,CPU:2.5G,DRAMCFG:SS_16G,NANDCFG:SD_1T
639-05568	PCBA,MLB,2.5G,SS-16G,SS-1T,X941	BASE_BOM,DEVEL_BOM,ALTERNATE,CPU:2.5G,DRAMCFG:SS_16G,NANDCFG:SS_1T
639-05569	PCBA,MLB,2.5G,SS-16G,TO-1T,X941	BASE_BOM,DEVEL_BOM,ALTERNATE,CPU:2.5G,DRAMCFG:SS_16G,NANDCFG:TO_1T
639-05570	PCBA,MLB,2.5G,HY-8G,SS-2T,X941	BASE_BOM,DEVEL_BOM,ALTERNATE,CPU:2.5G,DRAMCFG:HY_8G,NANDCFG:SS_2T
639-05571	PCBA,MLB,2.5G,MI-8G,SS-2T,X941	BASE_BOM,DEVEL_BOM,ALTERNATE,CPU:2.5G,DRAMCFG:MI_8G,NANDCFG:SS_2T
639-05572	PCBA,MLB,2.5G,SS-8G,SS-2T,X941	BASE_BOM,DEVEL_BOM,ALTERNATE,CPU:2.5G,DRAMCFG:SS_8G,NANDCFG:SS_2T
639-05573	PCBA,MLB,2.5G,HY-16G,SS-2T,X941	BASE_BOM,DEVEL_BOM,ALTERNATE,CPU:2.5G,DRAMCFG:HY_16G,NANDCFG:SS_2T
639-05574	PCBA,MLB,2.5G,MI-16G,SS-2T,X941	BASE_BOM,DEVEL_BOM,ALTERNATE,CPU:2.5G,DRAMCFG:MI_16G,NANDCFG:SS_2T
639-05575	PCBA,MLB,2.5G,SS-16G,SS-2T,X941	BASE_BOM,DEVEL_BOM,ALTERNATE,CPU:2.5G,DRAMCFG:SS_16G,NANDCFG:SS_2T

NotebookSchematics.com
Schematics, Boardviews & Smartphone Service Manuals

NOTICE OF PROPRIETARY PROPERTY:
THE INFORMATION CONTAINED HEREIN IS THE PROPRIETARY PROPERTY OF APPLE INC.
THE POSESSOR AGREES TO THE FOLLOWING:
I TO MAINTAIN THIS DOCUMENT IN CONFIDENCE
II NOT TO REPRODUCE OR COPY IT
III NOT TO REVEAL OR PUBLISH IT IN WHOLE OR PART
IV ALL RIGHTS RESERVED

BOM Variants

BOM NUMBER	BOM NAME	BOM OPTIONS
639-05576	PCBA,MLB,2.6G,HY-8G,SD-256G,X941	BASE_BOM,DEVEL_BOM,ALTERNATE,CPU:2.6G,DRAMCFG:HY_8G,NANDCFG:SD_256G
639-05577	PCBA,MLB,2.6G,HY-8G,TO-256G,X941	BASE_BOM,DEVEL_BOM,ALTERNATE,CPU:2.6G,DRAMCFG:HY_8G,NANDCFG:TO_256G
639-05578	PCBA,MLB,2.6G,MI-8G,SD-256G,X941	BASE_BOM,DEVEL_BOM,ALTERNATE,CPU:2.6G,DRAMCFG:MI_8G,NANDCFG:SD_256G
639-05579	PCBA,MLB,2.6G,MI-8G,TO-256G,X941	BASE_BOM,DEVEL_BOM,ALTERNATE,CPU:2.6G,DRAMCFG:MI_8G,NANDCFG:TO_256G
639-05580	PCBA,MLB,2.6G,SS-8G,SD-256G,X941	BASE_BOM,DEVEL_BOM,ALTERNATE,CPU:2.6G,DRAMCFG:SS_8G,NANDCFG:SD_256G
639-05581	PCBA,MLB,2.6G,SS-8G,TO-256G,X941	BASE_BOM,DEVEL_BOM,ALTERNATE,CPU:2.6G,DRAMCFG:SS_8G,NANDCFG:TO_256G
639-05582	PCBA,MLB,2.6G,HY-16G,SD-256G,X941	BASE_BOM,DEVEL_BOM,ALTERNATE,CPU:2.6G,DRAMCFG:HY_16G,NANDCFG:SD_256G
639-05583	PCBA,MLB,2.6G,HY-16G,TO-256G,X941	BASE_BOM,DEVEL_BOM,ALTERNATE,CPU:2.6G,DRAMCFG:HY_16G,NANDCFG:TO_256G
639-05584	PCBA,MLB,2.6G,MI-16G,SD-256G,X941	BASE_BOM,DEVEL_BOM,ALTERNATE,CPU:2.6G,DRAMCFG:MI_16G,NANDCFG:SD_256G
639-05585	PCBA,MLB,2.6G,MI-16G,TO-256G,X941	BASE_BOM,DEVEL_BOM,ALTERNATE,CPU:2.6G,DRAMCFG:MI_16G,NANDCFG:TO_256G
639-05586	PCBA,MLB,2.6G,SS-16G,SD-256G,X941	BASE_BOM,DEVEL_BOM,ALTERNATE,CPU:2.6G,DRAMCFG:SS_16G,NANDCFG:SD_256G
639-05587	PCBA,MLB,2.6G,SS-16G,TO-256G,X941	BASE_BOM,DEVEL_BOM,ALTERNATE,CPU:2.6G,DRAMCFG:SS_16G,NANDCFG:TO_256G
639-05588	PCBA,MLB,2.6G,HY-8G,SD-512G,X941	BASE_BOM,DEVEL_BOM,ALTERNATE,CPU:2.6G,DRAMCFG:HY_8G,NANDCFG:SD_512G
639-05589	PCBA,MLB,2.6G,HY-8G,TO-512G,X941	BASE_BOM,DEVEL_BOM,ALTERNATE,CPU:2.6G,DRAMCFG:HY_8G,NANDCFG:TO_512G
639-05590	PCBA,MLB,2.6G,MI-8G,SD-512G,X941	BASE_BOM,DEVEL_BOM,ALTERNATE,CPU:2.6G,DRAMCFG:MI_8G,NANDCFG:SD_512G
639-05591	PCBA,MLB,2.6G,MI-8G,TO-512G,X941	BASE_BOM,DEVEL_BOM,ALTERNATE,CPU:2.6G,DRAMCFG:MI_8G,NANDCFG:TO_512G
639-05592	PCBA,MLB,2.6G,SS-8G,SD-512G,X941	BASE_BOM,DEVEL_BOM,ALTERNATE,CPU:2.6G,DRAMCFG:SS_8G,NANDCFG:SD_512G
639-05593	PCBA,MLB,2.6G,SS-8G,TO-512G,X941	BASE_BOM,DEVEL_BOM,ALTERNATE,CPU:2.6G,DRAMCFG:SS_8G,NANDCFG:TO_512G
639-05594	PCBA,MLB,2.6G,HY-16G,SD-512G,X941	BASE_BOM,DEVEL_BOM,ALTERNATE,CPU:2.6G,DRAMCFG:HY_16G,NANDCFG:SD_512G
639-05595	PCBA,MLB,2.6G,HY-16G,TO-512G,X941	BASE_BOM,DEVEL_BOM,ALTERNATE,CPU:2.6G,DRAMCFG:HY_16G,NANDCFG:TO_512G
639-05596	PCBA,MLB,2.6G,MI-16G,SD-512G,X941	BASE_BOM,DEVEL_BOM,ALTERNATE,CPU:2.6G,DRAMCFG:MI_16G,NANDCFG:SD_512G
639-05597	PCBA,MLB,2.6G,MI-16G,TO-512G,X941	BASE_BOM,DEVEL_BOM,ALTERNATE,CPU:2.6G,DRAMCFG:MI_16G,NANDCFG:TO_512G
639-05598	PCBA,MLB,2.6G,SS-16G,SD-512G,X941	BASE_BOM,DEVEL_BOM,ALTERNATE,CPU:2.6G,DRAMCFG:SS_16G,NANDCFG:SD_512G
639-05599	PCBA,MLB,2.6G,SS-16G,TO-512G,X941	BASE_BOM,DEVEL_BOM,ALTERNATE,CPU:2.6G,DRAMCFG:SS_16G,NANDCFG:TO_512G
639-05600	PCBA,MLB,2.6G,HY-8G,SD-1T,X941	BASE_BOM,DEVEL_BOM,ALTERNATE,CPU:2.6G,DRAMCFG:HY_8G,NANDCFG:SD_1T
639-05601	PCBA,MLB,2.6G,HY-8G,SS-1T,X941	BASE_BOM,DEVEL_BOM,ALTERNATE,CPU:2.6G,DRAMCFG:HY_8G,NANDCFG:SS_1T
639-05602	PCBA,MLB,2.6G,HY-8G,TO-1T,X941	BASE_BOM,DEVEL_BOM,ALTERNATE,CPU:2.6G,DRAMCFG:HY_8G,NANDCFG:TO_1T
639-05603	PCBA,MLB,2.6G,MI-8G,SD-1T,X941	BASE_BOM,DEVEL_BOM,ALTERNATE,CPU:2.6G,DRAMCFG:MI_8G,NANDCFG:SD_1T
639-05604	PCBA,MLB,2.6G,MI-8G,SS-1T,X941	BASE_BOM,DEVEL_BOM,ALTERNATE,CPU:2.6G,DRAMCFG:MI_8G,NANDCFG:SS_1T
639-05605	PCBA,MLB,2.6G,MI-8G,TO-1T,X941	BASE_BOM,DEVEL_BOM,ALTERNATE,CPU:2.6G,DRAMCFG:MI_8G,NANDCFG:TO_1T
639-05606	PCBA,MLB,2.6G,SS-8G,SD-1T,X941	BASE_BOM,DEVEL_BOM,ALTERNATE,CPU:2.6G,DRAMCFG:SS_8G,NANDCFG:SD_1T
639-05607	PCBA,MLB,2.6G,SS-8G,SS-1T,X941	BASE_BOM,DEVEL_BOM,ALTERNATE,CPU:2.6G,DRAMCFG:SS_8G,NANDCFG:SS_1T
639-05608	PCBA,MLB,2.6G,SS-8G,TO-1T,X941	BASE_BOM,DEVEL_BOM,ALTERNATE,CPU:2.6G,DRAMCFG:SS_8G,NANDCFG:TO_1T
639-05609	PCBA,MLB,2.6G,HY-16G,SD-1T,X941	BASE_BOM,DEVEL_BOM,ALTERNATE,CPU:2.6G,DRAMCFG:HY_16G,NANDCFG:SD_1T
639-05610	PCBA,MLB,2.6G,HY-16G,SS-1T,X941	BASE_BOM,DEVEL_BOM,ALTERNATE,CPU:2.6G,DRAMCFG:HY_16G,NANDCFG:SS_1T
639-05611	PCBA,MLB,2.6G,HY-16G,TO-1T,X941	BASE_BOM,DEVEL_BOM,ALTERNATE,CPU:2.6G,DRAMCFG:HY_16G,NANDCFG:TO_1T
639-05612	PCBA,MLB,2.6G,MI-16G,SD-1T,X941	BASE_BOM,DEVEL_BOM,ALTERNATE,CPU:2.6G,DRAMCFG:MI_16G,NANDCFG:SD_1T
639-05613	PCBA,MLB,2.6G,MI-16G,SS-1T,X941	BASE_BOM,DEVEL_BOM,ALTERNATE,CPU:2.6G,DRAMCFG:MI_16G,NANDCFG:SS_1T
639-05614	PCBA,MLB,2.6G,MI-16G,TO-1T,X941	BASE_BOM,DEVEL_BOM,ALTERNATE,CPU:2.6G,DRAMCFG:MI_16G,NANDCFG:TO_1T
639-05615	PCBA,MLB,2.6G,SS-16G,SD-1T,X941	BASE_BOM,DEVEL_BOM,ALTERNATE,CPU:2.6G,DRAMCFG:SS_16G,NANDCFG:SD_1T
639-05616	PCBA,MLB,2.6G,SS-16G,SS-1T,X941	BASE_BOM,DEVEL_BOM,ALTERNATE,CPU:2.6G,DRAMCFG:SS_16G,NANDCFG:SS_1T
639-05617	PCBA,MLB,2.6G,SS-16G,TO-1T,X941	BASE_BOM,DEVEL_BOM,ALTERNATE,CPU:2.6G,DRAMCFG:SS_16G,NANDCFG:TO_1T
639-05618	PCBA,MLB,2.6G,HY-8G,SS-2T,X941	BASE_BOM,DEVEL_BOM,ALTERNATE,CPU:2.6G,DRAMCFG:HY_8G,NANDCFG:SS_2T
639-05619	PCBA,MLB,2.6G,MI-8G,SS-2T,X941	BASE_BOM,DEVEL_BOM,ALTERNATE,CPU:2.6G,DRAMCFG:MI_8G,NANDCFG:SS_2T
639-05620	PCBA,MLB,2.6G,SS-8G,SS-2T,X941	BASE_BOM,DEVEL_BOM,ALTERNATE,CPU:2.6G,DRAMCFG:SS_8G,NANDCFG:SS_2T
639-05621	PCBA,MLB,2.6G,HY-16G,SS-2T,X941	BASE_BOM,DEVEL_BOM,ALTERNATE,CPU:2.6G,DRAMCFG:HY_16G,NANDCFG:SS_2T
639-05622	PCBA,MLB,2.6G,MI-16G,SS-2T,X941	BASE_BOM,DEVEL_BOM,ALTERNATE,CPU:2.6G,DRAMCFG:MI_16G,NANDCFG:SS_2T
639-05623	PCBA,MLB,2.6G,SS-16G,SS-2T,X941	BASE_BOM,DEVEL_BOM,ALTERNATE,CPU:2.6G,DRAMCFG:SS_16G,NANDCFG:SS_2T

NotebookSchematics.com
Schematics, Boardviews & Smartphone Service Manuals

NOTICE OF PROPRIETARY PROPERTY:
THE INFORMATION CONTAINED HEREIN IS THE PROPRIETARY PROPERTY OF APPLE INC.
THE POSESSOR AGREES TO THE FOLLOWING:
I TO MAINTAIN THIS DOCUMENT IN CONFIDENCE
II NOT TO REPRODUCE OR COPY IT
III NOT TO REVEAL OR PUBLISH IT IN WHOLE OR PART
IV ALL RIGHTS RESERVED

Alternate Parts

System EE

PART NUMBER	ALTERNATE FOR PART NUMBER	BOM OPTION	REF DES	COMMENTS:
103S0321	103S0276		ALL	
103S00248	103S00247		ALL	8.06K 0.1% RESISTOR
103S00250	103S00249		ALL	18.2K 0.1% RESISTOR
107S0284	107S00021	SENSOR:DEV	ALL	TFT w/ Yageo
107S00101	107S00005	SENSOR:DEV	ALL	Cyntec w/ Yageo
107S00102	107S00017	SENSOR:DEV	ALL	Cyntec w/ Yageo
107S0276	107S00020	SENSOR:DEV	ALL	Cyntec w/ TFT
107S00086	107S00056	ANY	ALL	TFT w/ Cyntec
107S00100	107S00057		ALL	Cyntec w/ TFT
107S00103	107S00058	SENSOR:DEV	ALL	Cyntec w/ Yageo
107S00070	107S0085		ALL	100K THERMISTOR
132S00202	132S00175		ALL	
138S00084	138S00060		ALL	
138S00117	138S00071		ALL	
138S0714	138S0713		ALL	Murata w/ Samsung
138S0715	138S0732		ALL	Murata w/ Samsung
138S0706	138S0739		ALL	NEC w/ Vishay
138S0945	138S0739		ALL	NEC w/ Rohm
138S00049	138S0831	ANY	ALL	
138S00006	138S0835		ALL	
138S00086	138S0884		ALL	
138S00104	138S0978		ALL	Murata w/ Taiyo
138S00056	138S1100		ALL	
152S00369	152S00268		ALL	Cyntec w/ NEC
152S00403	152S00322		ALL	Murata w/ Chillisin
152S00864	152S00851		ALL	
152S00434	152S1829		ALL	
155S0665	155S00232		ALL	
155S00166	155S0391		ALL	
155S00018	155S0664		ALL	Murata w/ Taiyo
155S00007	155S0667		ALL	
155S0914	155S0897		ALL	
155S00190	155S0897		ALL	
197S00046	197S00036		ALL	Epson w/ TXC
197S00047	197S00036		ALL	Kyocera w/ TXC
197S00048	197S00036		ALL	Murata w/ TXC
197S00053	197S00050		ALL	Kyocera w/ TXC
197S00054	197S00050		ALL	NDK w/ TXC
197S00055	197S00050		ALL	Murata w/ TXC
197S00120	197S00118		ALL	
311S0426	311S00007		ALL	
311S00104	311S00091	ANY	ALL	
311S00156	311S00129		ALL	
311S00196	311S00195		ALL	
311S00060	311S0273		ALL	
311S00121	311S0398		ALL	
311S00138	311S0436		ALL	
311S00013	311S0508		ALL	NXP w/ Diodes
335S00270	335S00203		ALL	
335S00213	335S0888		ALL	
353S0878	353S00599		ALL	
353S0879	353S00754		ALL	
353S00750	353S00877		ALL	
353S01041	353S01042		ALL	
353S01346	353S01320		ALL	
353S01506	353S01404	ANY	ALL	
353S00107	353S3239	ANY	ALL	Onsemi alt to Intersil
353S00636	353S4037	ANY	ALL	
353S00772	353S4068		ALL	
371S00089	371S00085		ALL	

System EE

PART NUMBER	ALTERNATE FOR PART NUMBER	BOM OPTION	REF DES	COMMENTS:
371S00170	371S00125		ALL	
371S00127	371S00182		ALL	
372S00016	372S00015		ALL	
372S0186	372S0185		ALL	
376S00219	376S00079		ALL	
376S00292	376S00294		ALL	
376S1080	376S0820		ALL	
376S00074	376S0855		ALL	
376S00146	376S1061		ALL	NXP w/ Diodes
376S00282	376S1128		ALL	
377S00079	377S00077		ALL	
377S0077	377S0183		ALL	Infineon w/ ST
740S00033	740S00002		ALL	
740S00019	740S00007		ALL	Bourns w/ Polytronics
740S00003	740S0135		ALL	

Audio

PART NUMBER	ALTERNATE FOR PART NUMBER	BOM OPTION	REF DES	COMMENTS:
138S0700	138S0641		ALL	Murata w/ SS&Taiyo
138S0660	138S0684		ALL	
138S0689	138S0701		ALL	
138S1103	138S0719		ALL	
155S0694	155S0387		ALL	
155S0660	155S0513		ALL	
155S00034	155S0706		ALL	Taiyo w/ Murata
155S00203	155S0894		ALL	
311S0271	311S00008		ALL	

BLC

PART NUMBER	ALTERNATE FOR PART NUMBER	BOM OPTION	REF DES	COMMENTS:
107S00033	107S00034		ALL	
138S0738	138S1101		ALL	Samsung alt to Murata
138S0846	138S0811		ALL	Samsung alt to Murata
152S00359	152S00253		ALL	Chilisin alt to Cyntec
353S01615	353S4160		ALL	Aizu alt to Maine
371S00180	371S00077		ALL	NXP alt to Diodes
376S1053	376S0604		ALL	Diodes alt to Fairchild
376S1106	376S0678		ALL	Fairchild alt to Vishay
740S00041	740S0159		ALL	

WIRELESS

PART NUMBER	ALTERNATE FOR PART NUMBER	BOM OPTION	REF DES	COMMENTS:
138S00024	138S0986		ALL	
152S00769	152S00659		ALL	
152S00770	152S0857		ALL	
155S00067	155S00401		ALL	
339S00428	339S00458		ALL	

DC-DC

PART NUMBER	ALTERNATE FOR PART NUMBER	BOM OPTION	REF DES	COMMENTS:
107S00015	107S00011		ALL	
107S00087	107S00029		ALL	TFT w/ Yageo
107S00071	107S00053		ALL	
107S00139	107S0178		ALL	
107S0249	107S0251		ALL	
128S00009	128S00007		ALL	
128S00070	128S00007		ALL	
128S00026	128S00011		ALL	
128S00031	128S00011		ALL	
128S00087	128S00011		ALL	
128S0302	128S00038		ALL	
128S00039	128S00038		ALL	
128S00062	128S00067		ALL	
128S00065	128S00067		ALL	
128S00069	128S00067		ALL	
128S0364	128S0264		ALL	Kemet w/ Panasonic
128S0578	128S0351		ALL	
128S00050	128S0351		ALL	
132S00012	132S0401		ALL	
132S00064	132S0409		ALL	
138S00077	138S00035		ALL	
138S00093	138S00035		ALL	
138S00111	138S00036		ALL	
138S00047	138S00073		ALL	
138S00229	138S00107		ALL	
138S0786	138S0705		ALL	Murata w/ Samsung
138S00097	138S0750		ALL	
138S0863	138S0853		ALL	
138S0775	138S0860		ALL	
138S0789	138S0941		ALL	Murata w/ SS
152S00363	152S00048		ALL	Cyntec w/ Vishay
152S00388	152S00182		ALL	
152S00703	152S00182		ALL	
152S00383	152S00198		ALL	
152S00680	152S00198		ALL	
152S00398	152S00204		ALL	
152S00841	152S00238		ALL	
152S00765	152S00239		ALL	
152S00368	152S00269		ALL	
152S00724	152S00311		ALL	
152S00786	152S00344		ALL	
152S00725	152S00590		ALL	
152S00726	152S00592		ALL	
152S00707	152S00689		ALL	
311S0596	311S0593		ALL	NXP w/ Diodes
311S00192	311S00191		ALL	
311S00193	311S00191		ALL	
353S00831	353S00519		ALL	
353S00796	353S00497		ALL	
353S00832	353S00525		ALL	
376S00303	376S00012		ALL	
376S00204	376S00203		ALL	
376S00226	376S00203		ALL	
376S00227	376S00203		ALL	
376S00302	376S1038		ALL	
376S00281	376S1147		ALL	
376S00007	376S1179		ALL	
376S00228	376S1179		ALL	
376S00304	376S1187		ALL	
740S0144	740S0118		ALL	
740S00028	740S0118		ALL	

NotebookSchematics.com
Schematics, Boardviews & Smartphone Service Manuals

PAGE TITLE
Alternates BOM Table

Apple Inc.

DRAWING NUMBER 051-02166 SIZE D
REVISION 4.0.0
BRANCH evt-mars-0
PAGE 145 OF 150
SHEET 107 OF 108

NOTICE OF PROPRIETARY PROPERTY:
THE INFORMATION CONTAINED HEREIN IS THE PROPRIETARY PROPERTY OF APPLE INC.
THE POSESSOR AGREES TO THE FOLLOWING:
I TO MAINTAIN THIS DOCUMENT IN CONFIDENCE
II NOT TO REPRODUCE OR COPY IT
III NOT TO REVEAL OR PUBLISH IT IN WHOLE OR PART
IV ALL RIGHTS RESERVED

Confluence:
https://confluence.appsit.apple.com/confluence/display/J79EE/Mac+HW+EE+Home

Kismet:
AFP://KISMET.APPLE.COM/KISMET-PROJECTS/J79

Useful Wiki Links:
Schematic Conventions - https://hmts.ecs.apple.com/wiki/index.php/User:Wferry/SchConventions
Schematic Design Wiki - https://hmts.ecs.apple.com/wiki/index.php/Schematic_Design

J132 HW Radar:
<rdar://component/XXXXXX> J132 HW EE | Proto 0
<rdar://component/XXXXXX> J132 HW EE BOM | Proto 0
<rdar://component/XXXXXX> J132 HW EE Characterization | Proto 0
<rdar://component/XXXXXX> J132 HW EE Layout | Proto 0
<rdar://component/XXXXXX> J132 HW EE Schematic | Proto 0
<rdar://component/XXXXXX> J132 HW EE SI | Proto 0

Other Info:
Page Allocations - <rdar://problem/19817053> 2015 Schematic Page Allocations

NotebookSchematics.com
Schematics, Boardviews & Smartphone Service Manuals

NOTICE OF PROPRIETARY PROPERTY:
THE INFORMATION CONTAINED HEREIN IS THE PROPRIETARY PROPERTY OF APPLE INC.
THE POSESSOR AGREES TO THE FOLLOWING:
I TO MAINTAIN THIS DOCUMENT IN CONFIDENCE
II NOT TO REPRODUCE OR COPY IT
III NOT TO REVEAL OR PUBLISH IT IN WHOLE OR PART
IV ALL RIGHTS RESERVED